DENTALEZ

EQUIPMENT, CABINETS AND UTILITY

2024

TABLE OF CONTENTS

EQUIPMENT

Pivot Chair Mount Packages **8**

Standard IC Control Head 8

Euro Control Head 9

Fixed Chair Mount with Sidebox Packages **10**

Standard IC Control Head 10

Euro Control Head 11

3900 Package Ordering Guide **12**

Fusion Packages **24**

Pivot Chair Mount 25

Fixed Mount with Sidebox 26

Rear Mount Side Delivery 27

Fusion Package Ordering Guide **28**

Surface Treatments **32**

Designer Friendly Colors and Surfaces 33

Chairs and Stools **35**

3900 Hydraulic Patient Chair 37

3900 Chair Upholstery Options 38

3800 Hydraulic Patient Chair 39

Chair Accessories 40

Economy and Deluxe Stools 41

Comfort Stools 42

Lights and Monitor Mounts **43**

Post Mount Lights 45

Track Mount Lights 46

Ceiling Mount Lights 47

Cabinet and Wall Mount Lights 48

Monitor Mount Assemblies 49

Rear Mount Side Delivery Systems **51**

Cabinetry Mounting Configurations 53

7020PRO Duo Swing Delivery Systems 54

7021PRO Duo Swing Delivery Systems 56

7010 Duo Swing Delivery Systems 58

3486 Swing Delivery Systems 60

Storage Organizer, Trays and Monitor Mount 62

Ancillary Ordering and Options **63**

Standard IC Delivery Unit 65

Euro Delivery Unit 66

Fusion Delivery Unit 67

Handpiece Bundles **68-69**

Control Head Accessories **70**

Ancillary Products 70

Simplified Cuspidors and Assistant's Instrumentation **73**

Fixed Mount with Sidebox, External Umbilical 76

Fixed Chair Post Mount, External Umbilical 80

Rear Beneath Shelf or Work Surface Mount 81

Simplified Rear and Side Delivery Systems

Side Cabinet and Wall Mount 82

Rear or Side Beneath Counter Mount 83

Rear Beneath Counter Mount 84

Panel Mounts 86

Rear or Side Mount Compact Controls 87

Mobile Carts 88

Factory Options and Parts **89**

General Information **95**

Dimensions 95

Equipment Maintenance 110

Equipment Terms and Warranty 111

CABINETS

Radiance Operatory **116**

Rear Cabinet (12 O'clock) 116

Side Cabinets 119

Island Cabinet 121

Imagine + Operatory **125**

Rear Cabinet (12 O'clock) 126

Side Cabinets 140

Island Cabinet 150

Operatory Mobile **157**

Sterilization Centers **163**

Orthodontic Cabinetry **170**

Reception/Front Desk Cabinetry **180**

Color Options **186**

Warranty **187**

UTILITY

Compressors **192**

Ramvac Compressors 192

Dry Vacuums **195**

Dry Vacuums 195

Badger LF 197

Tanks **198**

15 Gallon and 30 Gallon Tanks 198

InfiniTank 198

Wet Vacuums **199**

Barracuda 199

Maintenance **201**

Compressor and Vacuum Maintenance 201

Utility Room Accessories **202**

Remote Panels 202

Master Water Control Valve 202

Steel Frame Stands 202

Amalgam Separator 203

VACHECK / FLOWCHECK 203

SlugBuster 203

Quick Reference Guide **204**

Utility Warranty **206**

Ramvac
DENTALEZ

RAMVAC® WITH AERAS INTEL

In an increasingly complex world, smart devices simplify how we integrate new technology into everyday life. From smartphones to smart homes, intelligent devices are simplifying the way we live. And now, they're doing some of the work for us at work too. With Aeras Intel, the smart revolution has reached the dental office, offering interconnectivity, insight, and control.

AERAS, Inc. is a separate corporation from DENTALEZ, Inc.

Forest Packages
Chairs and Stools
Lights and Monitor Mounts
7000 Series
Delivery Systems
Simplified
Factory Options and Parts
General Information
Equipment Warranty
Radiance Operatory
Imagine + Operatory
Operatory Mobile
Sterilization Centers
Orthodontic Cabinetry
Reception/Front Desk Cabinetry
Color Options
Cabinet Warranty
Compressors
Dry Vacuums
Tanks
Wet Vacuums
Utility Room Accessories
Utility Warranty

Forest
PACKAGES

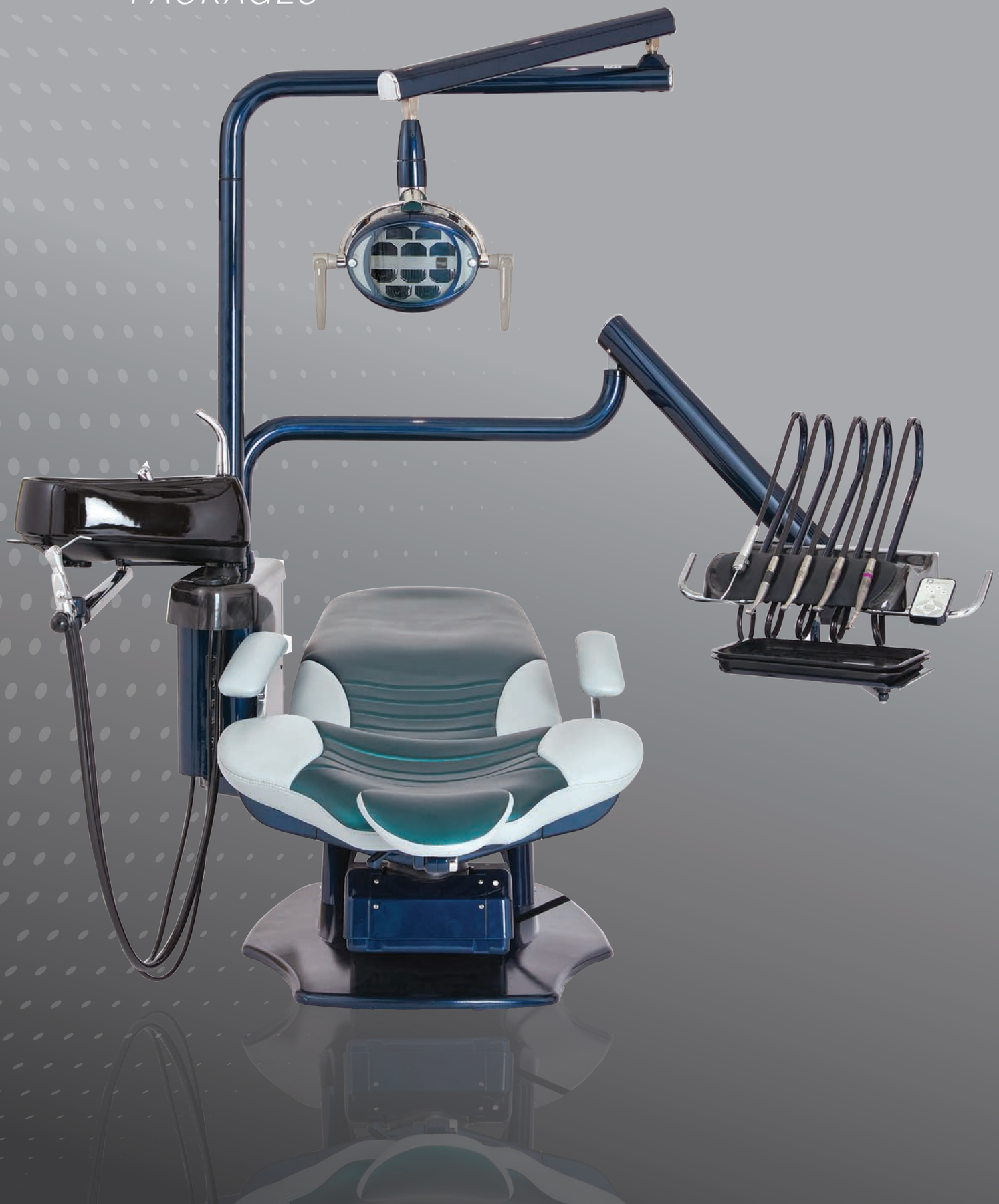

Forest Packages
Chairs and Stools
Lights and Monitor Mounts
7000 Series
Delivery Systems
Simplified
Factory Options and Parts
General Information
Equipment Warranty
Radiance Operatory
Imagine + Operatory
Operatory Mobile
Sterilization Centers
Orthodontic Cabinetry
Reception/Front Desk Cabinetry
Color Options
Cabinet Warranty
Compressors
Dry Vacuums
Tanks
Wet Vacuums
Utility Room Accessories
Utility Warranty

Standard Chair Color Options

Powder Coat Paint Forest Grey
Shown with Diplomat Blue Upholstery

Powder Coat Paint Shadow
Shown with Raven Wing Upholstery

Designer Friendly Chair Color Options

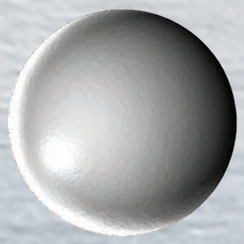

Arctic Silver

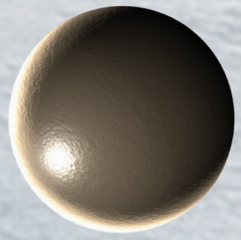

Bronze

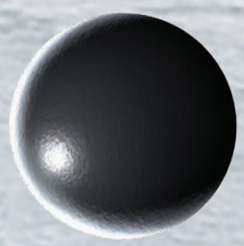

Charcoal

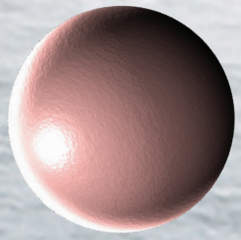

Copper

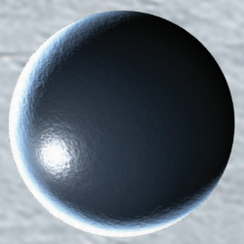

Midnight

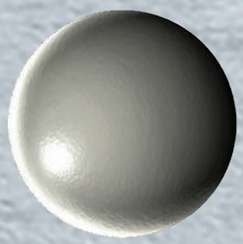

Pewter

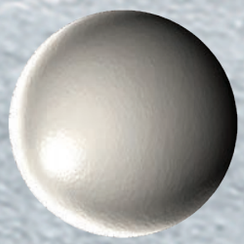

White

Forest Packages
Chairs and Stools
Lights and Monitor Mounts
7000 Series
Delivery Systems
Simplified
Factory Options and Parts
General Information
Equipment Warranty
Radiance Operatory
Imagine + Operatory
Operatory Mobile
Sterilization Centers
Orthodontic Cabinetry
Reception/Front Desk Cabinetry
Color Options
Cabinet Warranty
Compressors
Dry Vacuums
Tanks
Wet Vacuums
Utility Room Accessories
Utility Warranty

Pivot Chair Mount

Pivot Chair Mounts easily move left to right on large roller bearings to accommodate left and right-handed practitioners. Unlike a Fixed Chair Mount delivery system, the mounting arm comes from underneath the patient rather than over the top, making it less obtrusive and more patient-friendly. Pivot Assistant's Instrumentation, Operatory Lights and Monitor Mounts are popular options to support your style of practice.

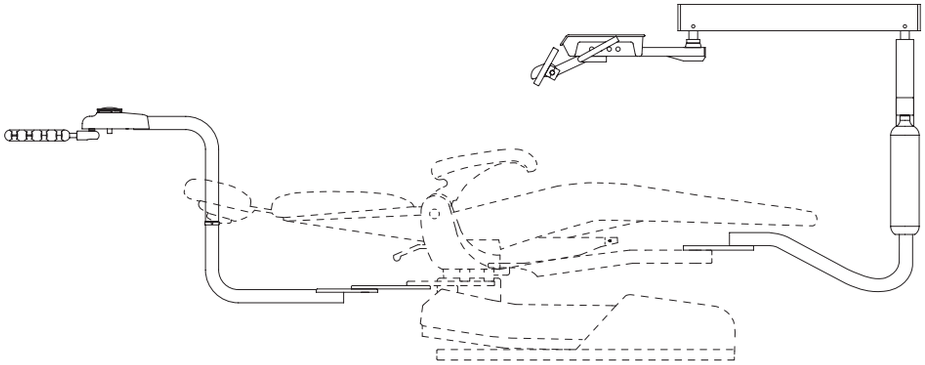

Fixed Chair Mount With Sidebox

Fixed Chair Mounts With Sidebox allow for a Cuspidor, Assistant's Instrumentation, a Monitor and Light to mount on a sidebox, which is large enough to accommodate a host of ancillary support products. Finish the aluminum side covers in one of our nine powder coat paint colors and choose a complementary carbon fiber trim to finish the top cap. If you use a cuspidor, select our beautiful high-gloss ceramic black for a customized and beautiful patient-friendly delivery system.

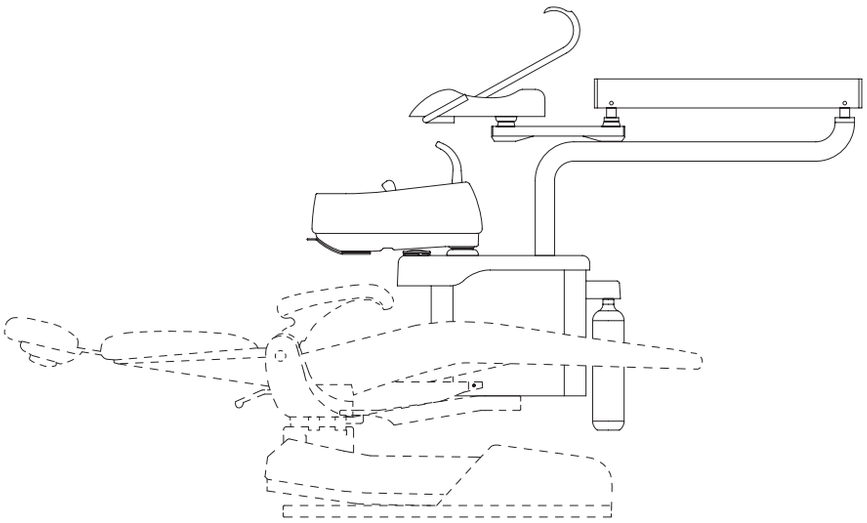

3900 Chair Package, Standard IC Delivery, Pivot

Base Package

Popular Options

Dr's Deluxe Stool, Ultraleather Upholstery

Part number: 6159C

E- Torque Electric Handpiece System

Part number: STAR-ETORQUE

LED Operatory Light, 9073

Part number: 9073

Assistants Instrumentation rear Pivot with touchpad

Part number: 1096

Note: Package shown in shadow paint with raven wing ultraleather.

Base Package As Shown

Description	Part Number
3900 Patient Chair	3900
Delivery System w/Standard IC, Pivot	4486PI
Assistants Instrumentation, Rear Pivot	1095
LED Operatory Light, 9078	9078
Light Post, Pivot	1113-654
Chair Control (select from unit-mounted, chair-mounted, or foot control)	3914-998-CS

Equipment dimensions, see page 95

Shipping weight estimate:

Delivery unit & chair	450 lb / 204 kg
Base package	580 lb / 264 kg
As shown package	630 lb / 286 kg

Popular Options

Description	Part Number
Dr. Deluxe Stool, Ultraleather Upholstery	6159C
Assistants Deluxe Stool No Back, Ultraleather Upholstery	6160C
E-Torque Electric HP System	STAR-ETORQUE
6-PIN Handpiece Illumination w/tubing	1700-019-CS
Quick Disconnect for Water	0016-454-CS
Quick Disconnect for Air	0016-456-CS
Routing Valve Kit	1115-315-CS
Additional HVE w/Dry Oral Cup	1400-113-CS
Soft Touch Back Massage	3900-100
LED Operatory Light, 9073	9073
Assistants Instrumentation, Rear Pivot with Touchpad	1096

Forest Packages
Chairs and Stools
Lights and Monitor Mounts
7000 Series
Delivery Systems
Simplified
Factory Options and Parts
General Information
Equipment Warranty
Radiance Operatory
Imagine + Operatory
Operatory Mobile
Sterilization Centers
Orthodontic Cabinetry
Reception/Front Desk Cabinetry
Color Options
Cabinet Warranty
Compressors
Dry Vacuums
Tanks
Wet Vacuums
Utility Room Accessories
Utility Warranty

3900 Chair Package, Euro Pivot Delivery

Base Package

Popular Options

Dr's Deluxe Stool, Ultraleather Upholstery

Part number: 6159C

E- Torque Electric Handpiece System

Part number: STAR-ETORQUE

LED Operatory Light, 9073

Part number: 9073

Assistants Instrumentation rear Pivot with touchpad

Part number: 1096

Base Package As Shown

Description	Part Number
3900 Patient Chair	3900
Delivery System w/Euro, Pivot	4988PI
Assistants Instrumentation, Rear Pivot	1095
LED Operatory Light, 9078	9078
Light Post, Pivot	1113-654
Chair Control (select from unit-mounted, chair-mounted, or foot control)	3914-998-CS

Equipment dimensions, see page 95

Shipping weight estimate:

Delivery unit & chair	445 lb / 203 kg
Base package	533 lb / 264 kg
As shown package	630 lb / 286 kg

Popular Options

Description	Part Number
Dr. Deluxe Stool, Ultraleather Upholstery	6159C
Assistants Deluxe Stool No Back, Ultraleather Upholstery	6160C
E-Torque Electric HP System	STAR-ETORQUE
6-PIN Handpiece Illumination w/tubing	1700-019-CS
Quick Disconnect for Water	0016-454-CS
Quick Disconnect for Air	0016-456-CS
Routing Valve Kit	1115-315-CS
Additional HVE w/Dry Oral Cup	1400-113-CS
Soft Touch Back Massage	3900-100
LED Operatory Light, 9073	9073
Assistants Instrumentation, Rear Pivot with Touchpad	1096

Forest Packages
Chairs and Stools
Lights and Monitor Mounts
7000 Series
Delivery Systems
Simplified
Factory Options and Parts
General Information
Equipment Warranty
Radiance Operatory
Imagine + Operatory
Operatory Mobile
Sterilization Centers
Orthodontic Cabinetry
Reception/Front Desk Cabinetry
Color Options
Cabinet Warranty
Compressors
Dry Vacuums
Tanks
Wet Vacuums
Utility Room Accessories
Utility Warranty

3900 Chair Package, Standard IC Delivery, Sidebox

Base Package

Popular Options

Dr's Deluxe Stool, Ultraleather Upholstery

Part number: 6159C

E- Torque Electric Handpiece System

Part number: STAR-ETORQUE

Swivel Tray

Part number: 1110-468

LED Operatory Light, 9073

Part number: 9073

Base Package As Shown

Description	Part Number
3900 Patient Chair	3900
Delivery System, Sidebox w/Standard IC	4485SI
Routing Valve	Included
Quick Disconnect for Water	Included
Quick Disconnect for Air	Included
Deluxe Cuspidor	1577
LED Operatory Light, 9078	9078
Light Post, Sidebox	1110-900
Chair Control (select from unit-mounted, chair-mounted, or foot control)	3914-998-CS

Equipment dimensions, see page 96

Shipping weight estimate:

Delivery unit & chair	440 lb / 202 kg
Base package	556 lb / 253 kg
As shown package	561 lb / 255 kg

Popular Options

Description	Part Number
Dr. Deluxe Stool, Ultraleather Upholstery	6159C
Assistants Deluxe Stool No Back, Ultraleather Upholstery	6160C
E-Torque Electric HP System	STAR-ETORQUE
Satelec SP	SATELEC-S
Satelec SP, LED lit	SATELEC-S-LED
6-PIN Handpiece Illumination w/tubing	1700-019-CS
Swivel Tray	1110-468
Additional Handpiece Position, Wet	1100-189-CS
Deluxe Cuspidor Remote Activation	1100-480-CS
LED Operatory Light, 9073	9073
Soft Touch Back Massage	3900-100

Forest Packages
Chairs and Stools
Lights and Monitor Mounts
7000 Series
Delivery Systems
Simplified
Factory Options and Parts
General Information
Equipment Warranty
Radiance Operatory
Imagine + Operatory
Operatory Mobile
Sterilization Centers
Orthodontic Cabinetry
Reception/Front Desk Cabinetry
Color Options
Cabinet Warranty
Compressors
Dry Vacuums
Tanks
Wet Vacuums
Utility Room Accessories
Utility Warranty

3900 Chair Package, Euro Sidebox Delivery

Base Package

Popular Options

Dr's Deluxe Stool,
Ultraleather Upholstery

Part number: 6159C

Assistants Deluxe Stool,
No Back,
Ultraleahter Upholstery

Part number: 6160C

E- Torque Electric
Handpiece System

Part number:
STAR-ETORQUE

LED Operatory Light, 9073

Part number: 9073

Base Package As Shown

Description	Part Number
3900 Patient Chair	3900
Delivery System, Sidebox w/Euro	4987SI
Routing Valve	Included
Quick Disconnect for Water	Included
Quick Disconnect for Air	Included
Deluxe Cuspidor	1577
LED Operatory Light, 9078	9078
Light Post, Sidebox	1110-900
Chair Control (select from unit-mounted, chair-mounted, or foot control)	3914-998-CS

Equipment dimensions, see page 96

Shipping weight estimate:

Delivery unit & chair	445 lb / 203 kg
Base package	551 lb / 251 kg
As shown package	551 lb / 251 kg

Popular Options

Description	Part Number
Dr. Deluxe Stool, Ultraleather Upholstery	6159C
Assistants Deluxe Stool No Back, Ultraleather Upholstery	6160C
E-Torque Electric HP System	STAR-ETORQUE
Satelec SP	SATELEC-S
Satelec SP, LED lit	SATELEC-S-LED
6-PIN Handpiece Illumination w/tubing	1700-019-CS
Additional Handpiece Position, Wet	1100-189-CS
Deluxe Cuspidor Remote Activation	1100-480-CS
LED Operatory Light, 9073	9073
Soft Touch Back Massage	3900-100

Forest Packages
Chairs and Stools
Lights and Monitor Mounts
7000 Series
Delivery Systems
Simplified
Factory Options and Parts
General Information
Equipment Warranty
Radiance Operatory
Imagine + Operatory
Operatory Mobile
Sterilization Centers
Orthodontic Cabinetry
Reception/Front Desk Cabinetry
Color Options
Cabinet Warranty
Compressors
Dry Vacuums
Tanks
Wet Vacuums
Utility Room Accessories
Utility Warranty

Forest DENTALEZ

3900 PACKAGE ORDERING GUIDE

SURFACE FINISH OPTIONS

ULTRALEATHER® 12 CLASSIC COLORS

Autumn Leaf · *Baltic* · *Boysenberry* · *Charcoal* · *Diplomat Blue* · *Doe*

Dove Grey · *Papyrus* · *Parrot* · *Raven Wing* · *St. John* · *Stone*

ULTRALEATHER 5 PEARLIZED COLORS

Midnight · *Oz* · *Pewter*

Pharoah · *Tin Man*

POWDER COAT PAINT 9 COLORS

Arctic Silver · *Forest Grey* · *Charcoal* · *Copper* · *Bronze*

Midnight · *Pewter* · *Shadow* · *White*

CARBON FIBER 3 PATTERNS

Greywood · *Laser Leather* · *Lemans*

Forest Packages
Chairs and Stools
Lights and Monitor Mounts
7000 Series
Delivery Systems
Simplified
Factory Options and Parts
General Information
Equipment Warranty
Radiance Operatory
Imagine + Operatory
Operatory Mobile
Sterilization Centers
Orthodontic Cabinetry
Reception/Front Desk Cabinetry
Color Options
Cabinet Warranty
Compressors
Dry Vacuums
Tanks
Wet Vacuums
Utility Room Accessories
Utility Warranty

TABLE OF CONTENTS

DESIGN YOUR 3900 PATIENT CHAIR

STEP 1: SELECT YOUR CHAIR - *Select 1 chair and 1 powder coat paint color*

	Description	Part #	Powder Coat Pain Color
☐	3900 Patient Chair	3900	☐ Forest Grey* ☐ Shadow*
☐	3900 Patient Chair, Designer Friendly	3900C	☐ Arctic Silver ☐ Bronze ☐ *White ☐ Charcoal ☐ Copper ☐ Midnight ☐ Pewter

*White, Shadow, and Forest Grey chairs come standard with the baseplate painted Shadow, all other colors come standard with the baseplate painted the same color as the chair.

STEP 2: SELECT YOUR UPHOLSTERY - *Select 1 option and 1 upholstery color*

	Description	Part #
☐	Wide Back, Plush	3907-PL-WB
☐	Wide Back, Seamless	3907-AS-WB
☐	Wide Back, Memory Comfort	3907-MC-WB
☐	Narrow Back, Plush	3907-PL-NB
☐	Narrow Back, Seamless	3907-AS-NB
☐	Narrow Back with Slings, Plush	3907-PL-NS
☐	Narrow Back with Slings, Seamless	3907-AS-NS

Upholstery Color (used as inner color if dual color upholstery is selected)

Standard Ultraleather® Colors

☐ Autumn Leaf ☐ Baltic
☐ Boysenberry ☐ Charcoal
☐ Doe ☐ Diplomat Blue
☐ Dove Grey ☐ Papyrus
☐ Parrot ☐ Raven Wing
☐ St. John ☐ Stone

☐ Midnight* ☐ Pewter* ☐ Oz*
☐ Tin Man* ☐ Pharoah* *Pearlized

☐ Special color, select PN 3907-999-SP from Step 3 and write color choice here: _____

STEP 3: ADDITIONAL UPHOLSTERY OPTIONS - *Select at least 1 of the below options*

☐	No Additional Options	N/A	
☐	Special Color Ultraleather Upholstery	3907-999-SP	Color:
☐	Dual Color, Plush - specify outer color (Not available with seamless or memory comfort)	3907-999-DC	Outer Color: (inner color selected in Step 2 above)
☐	Dual Color for Memory Comfort specify outer color	3907-MC-DC	Outer Color: (inner color selected in Step 2 above)
☐	Contrast/Deviated Stitching, Plush (Not available with seamless or memory comfort)	3907-999-DS	Thread Color:
☐	Neck Pillow	3907-318	Color:
☐	Knee Pillow	3907-317	Color (inner if dual color):
☐	Dual Color Upholstery, Knee Pillow	3907-317-DC	Outer Color:
☐	Contrast Stitch Upholstery, Knee Pillow	3907-317-DS	Thread Color:
☐	Pedo Booster Set	3907-180	
☐	29" Toe Guard in Lieu of 21"	3907-028-CS	

STEP 4: MASSAGE OPTION - *Select at least 1 of the below options*

☐	No Massage Options	N/A	
☐	Soft Touch Massage*	3900-100	Not available with Memory Comfort Upholstery

*If a chair-mounted delivery unit is being ordered then a utility center housing is included with purchase. Otherwise we recommend adding a utility center for the massage air compressor (Part numbers below).

STEP 5: UTILITY CENTER SELECTION - *Select at least 1 of the below options*

☐	No Additional Options	N/A	Select this option if you are buying a chair-mount delivery unit and no massager
	Contoured Utility Center Housing and Cover		
☐	Forest Grey	3900-101-G	
☐	Shadow	3900-101-SH	
☐	White	3900-101	
☐	Designer Friendly®	3900-101-C	

STEP 6: CHAIR CONTROL LOCATIOIN - *Select at least 1 chair control*

Maximum of 1 control can be mounted on the delivery unit, maximum of 2 on the chair (left & right), 4 total maximum number of controls per operatory

☐	First Chair Control (Required) First control included with chair purchase	3914-998-CS	☐ Delivery Unit ☐ Footswitch ☐ Chair, right side ☐ Chair, left side
☐	Second Chair Control (Optional)	3914-999-CS	☐ Delivery Unit ☐ Footswitch ☐ Chair, right side ☐ Chair, left side

Forest Packages
Chairs and Stools
Lights and Monitor Mounts
7000 Series
Delivery Systems
Simplified
Factory Options and Parts
General Information
Equipment Warranty
Radiance Operatory
Imagine + Operatory
Operatory Mobile
Sterilization Centers
Orthodontic Cabinetry
Reception/Front Desk Cabinetry
Color Options
Cabinet Warranty
Compressors
Dry Vacuums
Tanks
Wet Vacuums
Utility Room Accessories
Utility Warranty

PATIENT CHAIR

STEP **1** Chair paint color

STEP **2** Upholstery color (inner color if dual color selected)

STEP **3** Outer upholstery color (if dual color selected, PN 3907-99-DC)
Contrast stitch color (if color stitch selected, PN 3907-999-DS) ---------

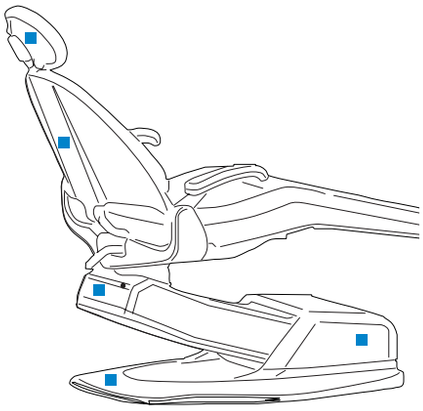

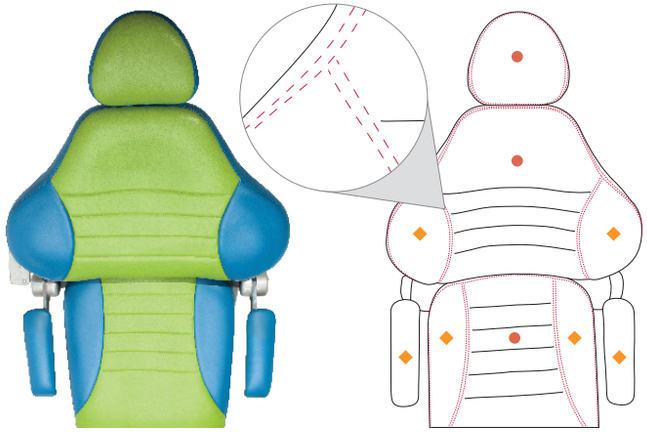

CHAIR IMAGES

Forest Packages
Chairs and Stools
Lights and Monitor Mounts
7000 Series
Delivery Systems
Simplified
Factory Options and Parts
General Information
Equipment Warranty
Radiance Operatory
Imagine + Operatory
Operatory Mobile
Sterilization Centers
Orthodontic Cabinetry
Reception/Front Desk Cabinetry
Color Options
Cabinet Warranty
Compressors
Dry Vacuums
Tanks
Wet Vacuums
Utility Room Accessories
Utility Warranty

DESIGN YOUR STANDARD IC DELIVERY SYSTEM

SURFACE FINISH OPTIONS

POWDER COAT PAINT 9 COLORS

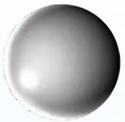

Arctic Silver

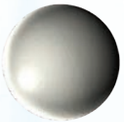

Forest Grey

Charcoal

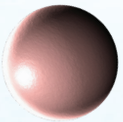

Copper

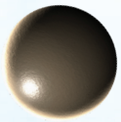

Bronze

Midnight

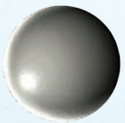

Pewter

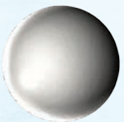

Shadow

White

CARBON FIBER 3 PATTERNS

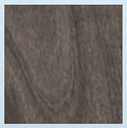

Greywood

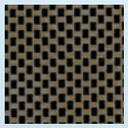

Laser Leather

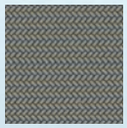

Lemans

TABLE OF CONTENTS

Forest Packages
Chairs and Stools
Lights and Monitor Mounts
7000 Series
Delivery Systems
Simplified
Factory Options and Parts
General Information
Equipment Warranty
Radiance Operatory
Imagine + Operatory
Operatory Mobile
Sterilization Centers
Orthodontic Cabinetry
Reception/Front Desk Cabinetry
Color Options
Cabinet Warranty
Compressors
Dry Vacuums
Tanks
Wet Vacuums
Utility Room Accessories
Utility Warranty

DESIGN YOUR STANDARD IC DELIVERY SYSTEM

STEP 7: SELECT YOUR DELIVERY SYSTEM - *Select 1 delivery system*

	Description	Part #
☐	Standard IC Delivery Head, Pivot Chair Mount	4486PI
☐	Standard IC Delivery Head, Fixed Chair Mount with Sidebox	4485SI

STEP 8: SURFACE TREATMENTS - *Select 1 powder coat and 1 plastic finish*

Powder Coat Paint:

☐ Forest Grey ☐ Shadow ☐ Arctic Silver ☐ Bronze ☐ Charcoal
☐ Copper ☐ Midnight ☐ Pewter ☐ White

Plastic Finish:

☐ Forest Grey ☐ Greywood ☐ Laser Leather
☐ Lemans ☐ White

STEP 9: CONFIGURE YOUR DELIVERY SYSTEM

Note: Please refer to ancillary and options graph in the catalog to determine number of ancillaries and options possible

Handpiece Positions / Comments
Default position placement
Added/optional positions

	Description	Part #	0	1	2	3	4	5	6
☐	Air/Water Syringe (included standard)								
☐	4-hole handpiece tubing (included standard)								
☐	5-hole system (1 tubing included, system accomodates a 2nd tubing)	1700-021-CS							
☐	- Second 5-hole tubing	0017-615-CS							
☐	6-pin system (1 tubing included, system accomodates a 2nd tubing)	1700-019-CS							
☐	- Second 6-pin tubing	0017-603-CS							
☐	Star® ETorque Electric System, Factory Installed*	STAR-ETORQUE							
☐	Star Blis-sonic™ SW Scaler (with 4 line swivel)*	STAR-BLIS-SW							
☐	Star Blis-sonic K Scaler (with fixed back-end)*	STAR-BLIS-K							
☐	Satelec SP Scaler*	SATELEC-S							
☐	Satelec SP LED Scaler*	SATELEC-S-LED							
☐	Cavitron Scaler*	CAVITRON							
☐	Additional Handpiece Position, Wet	1100-189-CS							
☐	Additional Handpiece Position, Air Drive Only	1100-190-CS							
☐	Assistant's hygiene instrumentation, control head-mounted Select 1 position for the SE and 1 position for the HVE	1408-CS	SE						
			HVE						
☐	Ancillary Shelf	0010-310							
☐	Star Handpiece Bundle (Write-in PN and price)								
☐	Quick Disconnect w/Flow Control, 1/4" (for water)	0016-454-CS	Included with 4485SI						
☐	Quick Disconnect w/Flow Control, 3/8" (for air)	0016-456-CS	Included with 4485SI						
☐	Swivel Tray	1110-468							
☐	Less sidebox telescoping assistant's instrumentation	1400-000-CS	4485SI only						
☐	Chrome Accents	9000-998-CS							
☐	Additional Umbilical, Per Foot (max of 9 feet)	1115-999-CS							
☐	Routing Valve Kit w/Water shutoff & Regulator, Factory inst.	1115-315-CS	Included with 4485SI						
☐	Routing Valve Kit for Cuspidor, Factory Installed	1115-316-CS							

* Ancillaries utilize an existing handpiece position - some integrated options may require purchase of Ancillary Shelf PN 0010-310

STEP 10: ASSISTANT'S INSTRUMENTATION AND CUSPIDORS - *Must select 1 option for order to be valid*

☐	No Assistant's Instrumentation or Cuspidor*	N/A	
☐	Rear Pivot Instrumentation, Quad Holder Bar	1095	
☐	Rear Pivot Instrumentation with Integrated Touchpad	1096	
☐	Rear Pivot Instrumentation with Deluxe Cuspidor**	1590	Bowl Color ☐ Black ☐ White
☐	Deluxe Cuspidor only, Rear Pivot**	1580	Bowl Color ☐ Black ☐ White
☐	Basic Cuspidor, Sidebox Mounted (4485SI only)	1679	
☐	Deluxe Cuspidor, Sidebox Mounted (4485SI only)**	1577	Bowl Color ☐ Black ☐ White

*Sidebox mounted telescoping assistant's instrumentation included standard with 4485SI **Not available with 4485SI

STEP 11: ASSISTANT'S INSTRUMENTATION AND CUSPIDOR OPTIONS

☐	Quick Disconnect w/Flow Control, 1/4" (For 1095 instrumentation)	0016-455-CS	Specify One ☐ Air ☐ Water
☐	Additional Autoclavable HVE with 5' Tubing & Dry Oral Cup	1400-113-CS	
☐	Hands-Free HVE Holder with HVE and 5' Tubing (Select PN) Colors (holder/tubing): GRY (white/grey), STG (white/sterling), BLK (black/black), SHW (black/shadow)		☐ 1400-279-STG ☐ 1400-279-BLK ☐ 1400-279-SHW ☐ 1400-279-GRY
☐	Self-Contained Clean Water System w/Quick Disconnect, 1.5L bottle (For 1095 Instrumentation only)	1700-319	
☐	Tray Assembly (For 1095 Instrumentation only)	1110-680	
☐	Deluxe Cuspidor Unit-Mounted Activation (For 1577, 1580, 1590)	1100-480-CS	
☐	Chair Control Touchpad - Mounted to 1095 Instrumentation	1700-088-CS	

Forest Packages
Chairs and Stools
Lights and Monitor Mounts
7000 Series
Delivery Systems
Simplified
Factory Options and Parts
General Information
Equipment Warranty
Radiance Operatory
Imagine + Operatory
Operatory Mobile
Sterilization Centers
Orthodontic Cabinetry
Reception/Front Desk Cabinetry
Color Options
Cabinet Warranty
Compressors
Dry Vacuums
Tanks
Wet Vacuums
Utility Room Accessories
Utility Warranty

STANDARD IC DELIVERY UNIT

STEP **8** Powder coat paint color

STEP **8** Powder coat paint with upgrade option to chrome/polished finish (PN 9000-998-CS, Step 9)

STEP **8** Plastic finish

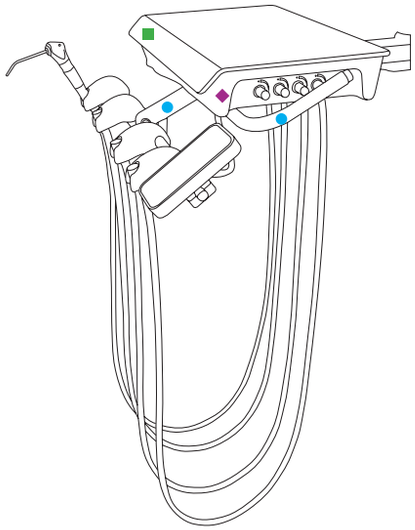

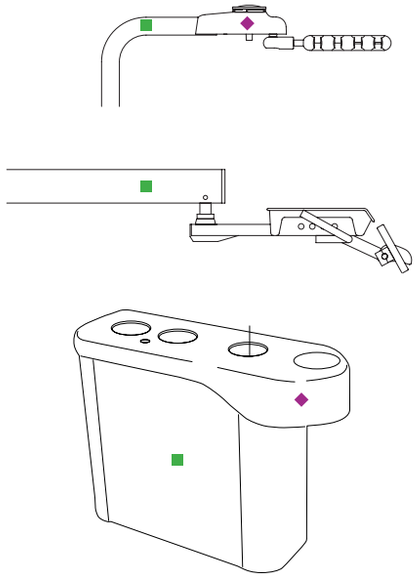

UNIT IMAGES

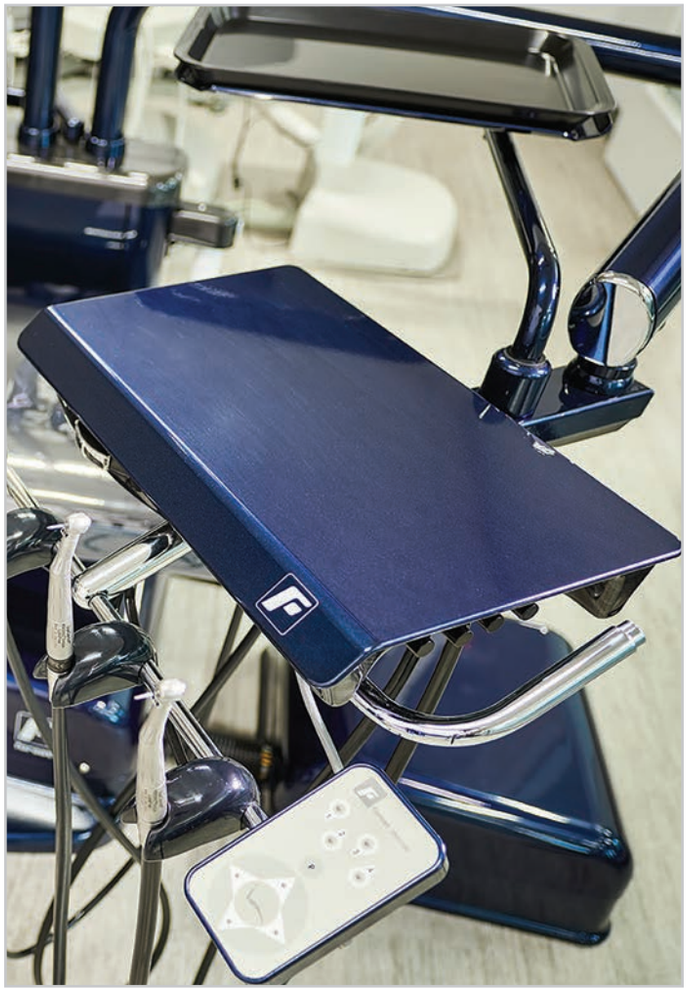

Forest Packages
Chairs and Stools
Lights and Monitor Mounts
7000 Series
Delivery Systems
Simplified
Factory Options and Parts
General Information
Equipment Warranty
Radiance Operatory
Imagine + Operatory
Operatory Mobile
Sterilization Centers
Orthodontic Cabinetry
Reception/Front Desk Cabinetry
Color Options
Cabinet Warranty
Compressors
Dry Vacuums
Tanks
Wet Vacuums
Utility Room Accessories
Utility Warranty

DESIGN YOUR EURO DELIVERY SYSTEM

SURFACE FINISH OPTIONS

POWDER COAT PAINT 9 COLORS

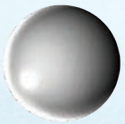

Arctic Silver

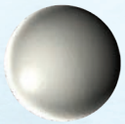

Forest Grey

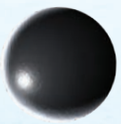

Charcoal

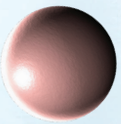

Copper

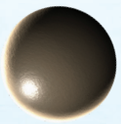

Bronze

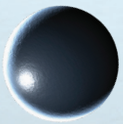

Midnight

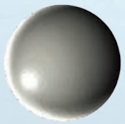

Pewter

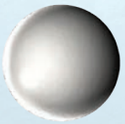

Shadow

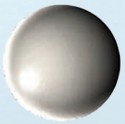

White

CARBON FIBER 3 PATTERNS

Greywood

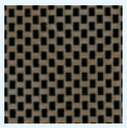

Laser Leather

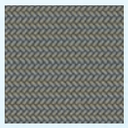

Lemans

TABLE OF CONTENTS

Forest Packages
Chairs and Stools
Lights and Monitor Mounts
7000 Series
Delivery Systems
Simplified
Factory Options and Parts
General Information
Equipment Warranty
Radiance Operatory
Imagine + Operatory
Operatory Mobile
Sterilization Centers
Orthodontic Cabinetry
Reception/Front Desk Cabinetry
Color Options
Cabinet Warranty
Compressors
Dry Vacuums
Tanks
Wet Vacuums
Utility Room Accessories
Utility Warranty

DESIGN YOUR EURO DELIVERY SYSTEM

STEP 7

STEP 7: SELECT YOUR DELIVERY SYSTEM - *Select 1 delivery system*

	Description	Part #	Comments
☐	Euro Delivery Head, Pivot Chair Mount	4988PI	
☐	Euro Delivery Head, Fixed with Sidebox	4987SI	

STEP 8

STEP 8: SURFACE TREATMENTS - *Select 1 powder coat and 1 plastic finish*

Powder Coat Paint:

☐ Forest Grey ☐ Shadow ☐ Arctic Silver ☐ Bronze ☐ Charcoal
☐ Copper ☐ Midnight ☐ Pewter ☐ White

Plastic Finish:

☐ Forest Grey ☐ Greywood ☐ Laser Leather
☐ Lemans ☐ White

STEP 9

STEP 9: CONFIGURE YOUR DELIVERY SYSTEM

Note: Please refer to ancillary and options graph in the catalog to determine number of ancillaries and options possible

	Description	Part #	Handpiece Positions / Comments 0	1	2	3	4
☐	Air/Water Syringe (included standard)		X				
☐	4-hole handpiece tubing (included standard)						
☐	5-hole system (1 tubing included, system accomodates a 2nd tubing)	1700-021-CS					
☐	- Second 5-hole tubing	0017-615-CS					
☐	6-pin system (1 tubing included, system accomodates a 2nd tubing)	1700-019-CS					
☐	- Second 6-pin tubing	0017-603-CS					
☐	Star® ETorque Electric System, Factory Installed	STAR-ETORQUE					
☐	Star Blis-sonic™ SW Scaler (with 4 line swivel)	STAR-BLIS-SW					
☐	Star Blis-sonic K Scaler (with fixed back-end)	STAR-BLIS-K					
☐	Satelec SP Scaler	SATELEC-S					
☐	Satelec SP LED Scaler	SATELEC-S-LED					
☐	Cavitron Scaler	CAVITRON					
☐	Star Handpiece Bundle (Write-in PN and price)						
☐	Quick Disconnect w/Flow Control, 1/4" (for water)	0016-454-CS	Included with 4987SI				
☐	Quick Disconnect w/Flow Control, 3/8" (for air)	0016-456-CS	Included with 4987SI				
☐	Less sidebox telescoping assistant's instrumentation	1400-000-CS	4987SI only				
☐	Chrome Accents	9000-998-CS					
☐	Additional Umbilical, Per Foot (max of 9 feet)	1115-999-CS					
☐	Routing Valve Kit w/Water shutoff & Regulator, Factory inst.	1115-315-CS	Included with 4987SI				
☐	Routing Valve Kit for Cuspidor, Factory Installed	1115-316-CS					

STEP 10

STEP 10: ASSISTANT'S INSTRUMENTATION AND CUSPIDORS - *Must select 1 option for order to be valid*

☐	No Assistant's Instrumentation or Cuspidor*	N/A			
☐	Rear Pivot Instrumentation, Quad Holder Bar	1095			
☐	Rear Pivot Instrumentation with Integrated Touchpad	1096			
☐	Rear Pivot Instrumentation with Deluxe Cuspidor**	1590	Bowl Color	☐ Black	☐ White
☐	Deluxe Cuspidor only, Rear Pivot**	1580	Bowl Color	☐ Black	☐ White
☐	Basic Cuspidor, Sidebox Mounted (4987SI only)	1679			
☐	Deluxe Cuspidor, Sidebox Mounted (4987SI only)**	1577	Bowl Color	☐ Black	☐ White

*Sidebox mounted telescoping assistant's instrumentation included standard with 4987SI **Not available with 4987SI

STEP 11

STEP 11: ASSISTANT'S INSTRUMENTATION OPTIONS

☐	Quick Disconnect w/Flow Control, 1/4" (For 1095 instrumentation)	0016-455-CS	Specify	☐ Air	☐ Water
☐	Additional Autoclavable HVE with 5' Tubing & Dry Oral Cup	1400-113-CS			
☐	Hands-Free HVE Holder with HVE and 5' Tubing (Select PN)		☐ 1400-279-STG	☐ 1400-279-BLK	
	Colors (holder/tubing): GRY (white/grey), STG (white/sterling), BLK (black/black), SHW (black/shadow)		☐ 1400-279-SHW	☐ 1400-279-GRY	
☐	Self-Contained Clean Water System w/Quick Disconnect, 1.5L bottle (For 1095 Instrumentation only)	1700-319			
☐	Tray Assembly (For 1095 Instrumentation only)	1110-680			
☐	Deluxe Cuspidor Unit-Mounted Activation (For 1577, 1580, 1590)	1100-480-CS			
☐	Chair Control Touchpad - Mounted to 1095 Instrumentation	1700-088-CS			

Forest Packages
Chairs and Stools
Lights and Monitor Mounts
7000 Series
Delivery Systems
Simplified
Factory Options and Parts
General Information
Equipment Warranty
Radiance Operatory
Imagine + Operatory
Operatory Mobile
Sterilization Centers
Orthodontic Cabinetry
Reception/Front Desk Cabinetry
Color Options
Cabinet Warranty
Compressors
Dry Vacuums
Tanks
Wet Vacuums
Utility Room Accessories
Utility Warranty

EURO DELIVERY UNIT

STEP **8** Powder coat paint color

STEP **8** Powder coat paint with upgrade option to chrome/polished finish (PN 9000-998-CS, Step 9)

STEP **8** Plastic finish

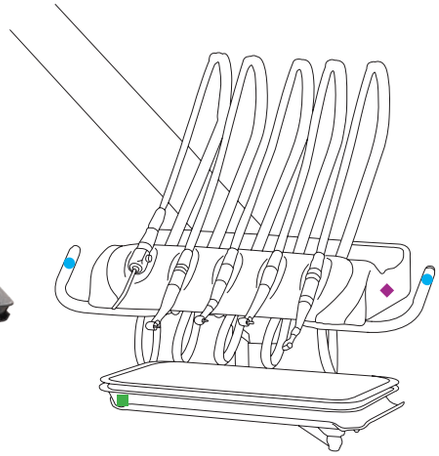

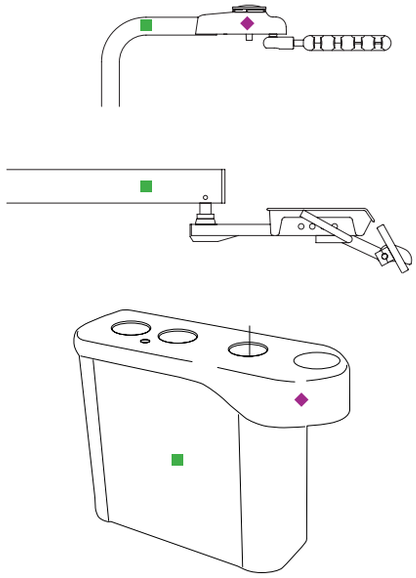

UNIT IMAGES

Forest Packages
Chairs and Stools
Lights and Monitor Mounts
7000 Series
Delivery Systems
Simplified
Factory Options and Parts
General Information
Equipment Warranty
Radiance Operatory
Imagine + Operatory
Operatory Mobile
Sterilization Centers
Orthodontic Cabinetry
Reception/Front Desk Cabinetry
Color Options
Cabinet Warranty
Compressors
Dry Vacuums
Tanks
Wet Vacuums
Utility Room Accessories
Utility Warranty

DESIGN YOUR LED OPERATORY LIGHT

SURFACE FINISH OPTIONS

POWDER COAT PAINT 9 COLORS

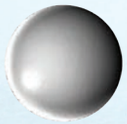
Arctic Silver

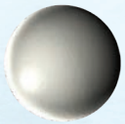
Forest Grey

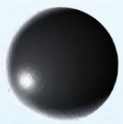
Charcoal

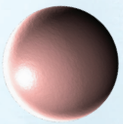
Copper

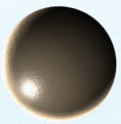
Bronze

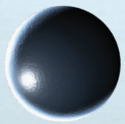
Midnight

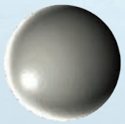
Pewter

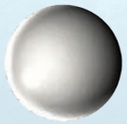
Shadow

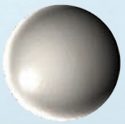
White

TABLE OF CONTENTS

Forest Packages
Chairs and Stools
Lights and Monitor Mounts
7000 Series
Delivery Systems
Simplified
Factory Options and Parts
General Information
Equipment Warranty
Radiance Operatory
Imagine + Operatory
Operatory Mobile
Sterilization Centers
Orthodontic Cabinetry
Reception/Front Desk Cabinetry
Color Options
Cabinet Warranty
Compressors
Dry Vacuums
Tanks
Wet Vacuums
Utility Room Accessories
Utility Warranty

DESIGN YOUR LED OPERATORY LIGHT

STEP 12

STEP 12: OPERATORY LIGHT - *Surface Treatments, 1 powder coat paint selection required*

Powder Coat Paint:

- ☐ Forest Grey
- ☐ Shadow
- ☐ Arctic Silver
- ☐ Bronze
- ☐ Charcoal
- ☐ Copper
- ☐ Midnight
- ☐ Pewter
- ☐ White

Select Light Head Mounting Option - *1 light and mounting option required*

	9083 Halogen		9078 LED		9073 LED	
	Part #	Qty	Part #	Qty	Part #	Qty
Chair Mount	☐ 9083		☐ 9078		☐ 9073	
Ceiling Mount	☐ 9083-CL		☐ 9078-CL		☐ 9073-CL	
Wall Mount	☐ 9093W		☐ 9079W		☐ 9074W	
Cabinet Mount	☐ 9093C		☐ 9079C		☐ 9074C	
Track Mount	☐ 9083T		☐ 9078T		☐ 9073T	

STEP 13

STEP 13: OPERATORY LIGHT CONFIGURATION AND OPTIONS

Configure based on the light-mounting option selected above

Chair Mounted Light Options (Pivot, Sidebox, and Fixed)

	Description	Part #	Qty
☐	20” Rigid Arm in Lieu of Standard 32” Arm	1110-227-CS	
	Light Posts (Select 1)		
☐	Sidebox, 44” Post	1110-900	
☐	Sidebox w/Monitor Cord slot, 44”	1110-170	
☐	Pivot without chair adapter (adapter included with unit purchase)	1113-654	
☐	Pivot with 3800/3900 chair adapter (when chair-mounted unit not ordered)	1113-654-CA	
	Monitor Mount Assemblies		
☐	Ring Post Mount Assembly (Must pair with either PN 1110-170 or 1110-045 above) This option allows you to have both a light and monitor mounted to your chair	1300RM	
☐	Top Post Mount Assembly (Must pair with one of the post options below) This option allows a monitor instead of a light on your chair	1300TPM	
☐	Sidebox: Monitor Post, Dual Slot, Fixed Sidebox Mount, 30”	1331-998	
☐	Pivot: Monitor in Lieu of Light Post, Pivot	1331-654	
☐	Pivot: Monitor in Lieu of Light Post, Pivot with Chair Adapter	1331-654-CA	

Ceiling Mounted Light Configuration (Select Mounting Height and Post Length)

Mounting Height (Required) ☐ 8’ ☐ 8’6” ☐ 9’ ☐ 9’6” ☐ 10’ ☐ 10’6” ☐ 11’ ☐ Custom Height, Specify:

Post Length (Required) ☐ 12” ☐ 18” ☐ 24” ☐ 30” ☐ 36” ☐ 42” ☐ 48” ☐ Custom Length (max 48”), Specify:

Cabinet and Wall Mounted Light Configuration and Options

	Description	Part #	Qty
	Arm Height (Required): ☐ Standard ☐ Tall	N/A	
	Specify Cabinet or Wall Mounting Height (write-in):	N/A	
☐	Horizontal Top Cabinet Mount in Lieu of Internal Mount	1110-881-CS	
☐	Vertical Exterior Cabinet Mount in Lieu of Internal Mount	1110-886-CS	

Track Mounted Light Configuration and Options

☐	Monitor Mount Assembly (specify monitor post length in next section)	1305T	
☐	S Video Cable, Pre-Installed	0014-282	
☐	RCA Cable, Pre-Installed	0014-283	

Select Track Mount Light Post Lengths

Mounting Height (Required) ☐ 8’ ☐ 8’6” ☐ 9’ ☐ 9’6” ☐ 10’ ☐ 10’6” ☐ 11’ ☐ Custom Height, Specify:

Light Post Length (Required) ☐ 7.25” ☐ 13.75” ☐ 19.75” ☐ 25.75” ☐ 31.75” ☐ 37.75” ☐ 43.75” ☐ Custom Length (max 43.75”), Specify:

Monitor Post Length (Required if 1305T selected) ☐ 20.25” ☐ 26.25” ☐ 32.25” ☐ 38.25” ☐ 44.25” ☐ 50.25” ☐ 56.25” ☐ Custom Length (max 56.25”), Specify:

Forest Packages
Chairs and Stools
Lights and Monitor Mounts
7000 Series
Delivery Systems
Simplified
Factory Options and Parts
General Information
Equipment Warranty
Radiance Operatory
Imagine + Operatory
Operatory Mobile
Sterilization Centers
Orthodontic Cabinetry
Reception/Front Desk Cabinetry
Color Options
Cabinet Warranty
Compressors
Dry Vacuums
Tanks
Wet Vacuums
Utility Room Accessories
Utility Warranty

OPERATORY LIGHT

STEP

12 Powder coat paint

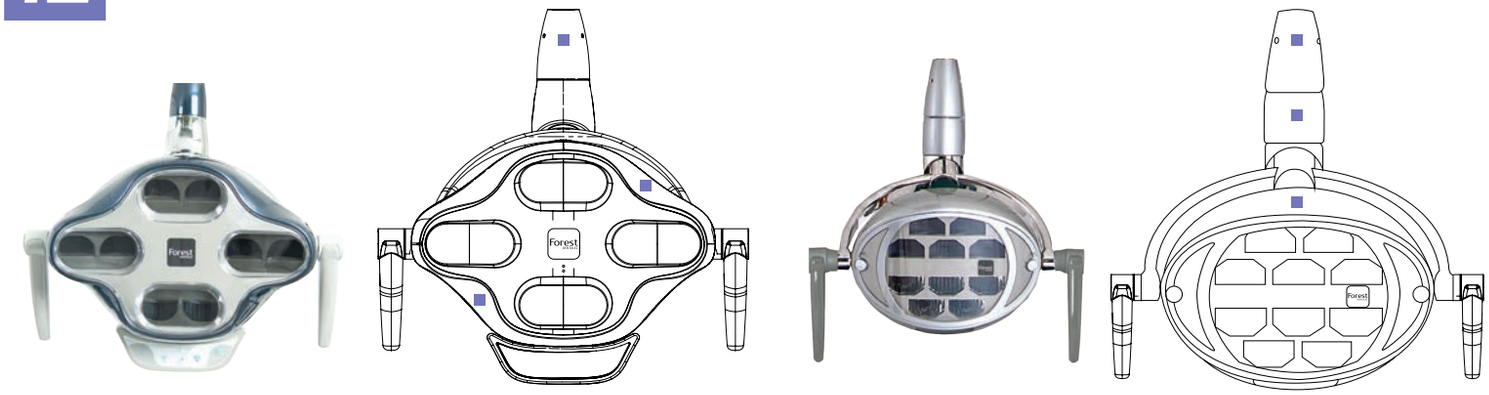

LIGHT IMAGES

Forest Packages
Chairs and Stools
Lights and Monitor Mounts
7000 Series
Delivery Systems
Simplified
Factory Options and Parts
General Information
Equipment Warranty
Radiance Operatory
Imagine + Operatory
Operatory Mobile
Sterilization Centers
Orthodontic Cabinetry
Reception/Front Desk Cabinetry
Color Options
Cabinet Warranty
Compressors
Dry Vacuums
Tanks
Wet Vacuums
Utility Room Accessories
Utility Warranty

THE FUSION PACKAGE

Forest

DENTALEZ

LUXURY MEETS AFFORDABILITY

The Fusion Package integrates thoughtful design with premium materials for years of beauty at an exceptional value.

Forest Packages
Chairs and Stools
Lights and Monitor Mounts
7000 Series
Delivery Systems
Simplified
Factory Options and Parts
General Information
Equipment Warranty
Radiance Operatory
Imagine + Operatory
Operatory Mobile
Sterilization Centers
Orthodontic Cabinetry
Reception/Front Desk Cabinetry
Color Options
Cabinet Warranty
Compressors
Dry Vacuums
Tanks
Wet Vacuums
Utility Room Accessories
Utility Warranty

Fusion, Pivot

Base Package

Popular Options

Dr's Economy Stool, Naugahyde Upholstery

Part number: 6156V

Assistants Economy Stool, Naugahyde Upholstery

Part number: 6157V

E- Torque Electric Handpiece System

Part number: STAR-ETORQUE

Assistants Instrumentation Rear Pivot with Touchpad

Part number: 1296

Base Package As Shown

Description	Part Number
3800 Patient Chair, Pretubed	3800PT
Delivery System, w/Fusion, Pivot	4296PI
Assistants Instrumentation, Rear Pivot	1295
LED Operatory Light, 9078	9078
Light Post, Pivot	1113-654
Chair Control (select from unit-mounted, chair-mounted, or foot control)	3914-998-CS

Equipment dimensions, see page 95

Shipping weight estimate:

Delivery Unit & Chair	445 lb / 203 kg
Base package	445 lb / 203 kg
As shown package	585 lb / 266 kg

Popular Options

Description	Part Number
Dr. Economy Stool, Naugahyde Upholstery	6156V
Assistants Economy Stool, Naugahyde Upholstery	6157V
E-Torque Electric HP System	STAR-ETORQUE
6-PIN Handpiece Illumination w/tubing	1700-019-CS
Quick Disconnect for Water	0016-454-CS
Quick Disconnect for Air	0016-456-CS
Routing Valve Kit	1115-315-CS
Additional HVE w/Dry Oral Cup	1400-113-CS
Ultraleather Upgrade	3807-999-UL
Assistants Instrumentation, Rear Pivot with Touchpad	1296

Forest Packages
Chairs and Stools
Lights and Monitor Mounts
7000 Series
Delivery Systems
Simplified
Factory Options and Parts
General Information
Equipment Warranty
Radiance Operatory
Imagine + Operatory
Operatory Mobile
Sterilization Centers
Orthodontic Cabinetry
Reception/Front Desk Cabinetry
Color Options
Cabinet Warranty
Compressors
Dry Vacuums
Tanks
Wet Vacuums
Utility Room Accessories
Utility Warranty

Fusion, Sidebox

Base Package

Popular Options

Dr's Economy Stool, Naugahyde Upholstery

Part number: 6156V

Assistants Economy Stool, Naugahyde Upholstery

Part number: 6157V

E- Torque Electric Handpiece System

Part number: STAR-ETORQUE

Base Package As Shown

Description	Part Number
3800 Patient Chair, Pretubed	3800PT
Delivery System, Sidebox w/Fusion	4295SI
Routing Valve	Included
Quick Disconnect for Water	Included
Quick Disconnect for Air	Included
Deluxe Cuspidor	1577
LED Operatory Light, 9078	9078
Light Post, Sidebox	1110-900
Chair Control (select from unit-mounted, chair-mounted, or foot control)	3914-998-CS

Equipment dimensions, see page 96

Shipping weight estimate:

Delivery unit & chair	440 lb / 202 kg
Base package	440 lb / 202 kg
As shown package	561 lb / 255 kg

Popular Options

Description	Part Number
Dr. Economy Stool, Naugahyde Upholstery	6156V
Assistants Economy Stool, Naugahyde Upholstery	6157V
E-Torque Electric HP System	STAR-ETORQUE
Satelec SP	SATELEC-S
Satelec SP, LED lit	SATELEC-S-LED
6-PIN Handpiece Illumination w/tubing	1700-019-CS
Swivel Tray	1110-468
Additional Handpiece Position, Wet	1100-189-CS
Deluxe Cuspidor Remote Activation	1100-480-CS

Forest Packages
Chairs and Stools
Lights and Monitor Mounts
7000 Series
Delivery Systems
Simplified
Factory Options and Parts
General Information
Equipment Warranty
Radiance Operatory
Imagine + Operatory
Operatory Mobile
Sterilization Centers
Orthodontic Cabinetry
Reception/Front Desk Cabinetry
Color Options
Cabinet Warranty
Compressors
Dry Vacuums
Tanks
Wet Vacuums
Utility Room Accessories
Utility Warranty

Fusion, 2186BC Rear Delivery

Base Package

Popular Options

Dr's Economy Stool, Naugahyde Upholstery

Part number: 6156V

Assistants Economy Stool, Naugahyde Upholstery

Part number: 6157V

Base Package As Shown

Description	Part Number
3800 Patient Chair	3800
Delivery System, Beneath Counter Duo	2186BC
LED Operatory Light, 9078	9078
Light Post, Pivot w/Chair Adapter	1113-654-CA
Chair Control (select from unit-mounted, chair-mounted, or foot control)	3914-998-CS

Shipping weight estimate:

Delivery Unit & Chair	445 lb / 203 kg
Base package	445 lb / 203 kg
As shown package	585 lb / 266 kg

Popular Options

Description	Part Number
Dr. Economy Stool, Naugahyde Upholstery	6156V
Assistants Economy Stool, Naugahyde Upholstery	6157V
6-PIN Handpiece Illumination w/tubing	1700-019-CS
Quick Disconnect for Water	0016-454-CS
Quick Disconnect for Air	0016-456-CS
Routing Valve Kit	1115-315-CS
Additional HVE w/Dry Oral Cup	1400-113-CS
Ultraleather Upgrade	3807-999-UL
LED Operatory Light, Ceiling Mounted	9078-CL
LED Operatory Light, Wall Mounted	9079W
Deluxe Utility Center Housing and Cover	1115-007-G

Forest Packages
Chairs and Stools
Lights and Monitor Mounts
7000 Series
Delivery Systems
Simplified
Factory Options and Parts
General Information
Equipment Warranty
Radiance Operatory
Imagine + Operatory
Operatory Mobile
Sterilization Centers
Orthodontic Cabinetry
Reception/Front Desk Cabinetry
Color Options
Cabinet Warranty
Compressors
Dry Vacuums
Tanks
Wet Vacuums
Utility Room Accessories
Utility Warranty

Forest
DENTALEZ

FUSION PACKAGE ORDERING GUIDE

NAUGAHYDE® UPHOLSTERY OPTIONS

Black	Cocoa	Deep Sapphire	Saddle	Sand	Taupe

Forest Packages
Chairs and Stools
Lights and Monitor Mounts
7000 Series
Delivery Systems
Simplified
Factory Options and Parts
General Information
Equipment Warranty
Radiance Operatory
Imagine + Operatory
Operatory Mobile
Sterilization Centers
Orthodontic Cabinetry
Reception/Front Desk Cabinetry
Color Options
Cabinet Warranty
Compressors
Dry Vacuums
Tanks
Wet Vacuums
Utility Room Accessories
Utility Warranty

DESIGN YOUR FUSION OPERATORY CHAIR

STEP 1

STEP 1: SELECT YOUR CHAIR - Select 1 chair

	Description	Part #	Qty.	Comments. color
☐	3800 Patient Chair, non-tubed	3800		Forest Grey w/Shadow baseplate only
☐	3800 Patient Chair, pre-tubed	3800PT		Forest Grey w/Shadow baseplate only

STEP 2

STEP 2: SELECT YOUR UPHOLSTERY - Select 1 option and 1 upholstery color

☐	Standard Naugahyde® Upholstery, Seamless (Included)	N/A	☐ Black ☐ Cocoa ☐ Deep Sapphire ☐ Saddle ☐ Sand ☐ Taupe
☐	Upgrade to standard Ultraleather® color, Seamless	3807-999-UL	Standard Ultraleather Colors ☐ Autumn Leaf ☐ Baltic ☐ Boysenberry ☐ Charcoal ☐ Diplomat Blue ☐ Doe ☐ Dove Grey ☐ Papyrus ☐ Parrot ☐ Raven Wing ☐ St. John ☐ Stone Standard Pearlized Ultraleather Colors ☐ Midnight ☐ Pewter ☐ Oz ☐ Pharaoh ☐ Tin Man
☐	Upgrade, special color Ultraleather, Seamless	3807-999-UL-SP	Specify Color:

STEP 3

STEP 3: ADDITIONAL UPHOLSTERY OPTIONS - Select at least 1 of the below options

	Description	Part #	Qty.	Comments, color
☐	No Additional Options	N/A		
☐	Neck Pillow (only available in Ultraleather)	3907-318		Color:
☐	Knee Pillow (only available in Ultraleather)	3907-317		Color (inner if dual color):
☐	Dual Color Upholstery, Knee Pillow	3907-317-DC		Outer Color:
☐	Contrast Stitch Upholstery, Knee Pillow	3907-317-DS		Thread Color:
☐	Pedo Booster Seat (only available in Ultraleather)	3907-180		Color:

STEP 4

STEP 4: UTILITY CENTER OPTIONS

	Description	Part #	Qty.	Comments, color
☐	No Utility Center*	N/A		Select this option if you are buying a chair-mounted delivery unit
☐	Deluxe Utility Center Housing & Cover, Rear Umbilical Access, Forest Grey	1115-007-G		
☐	Deluxe Utility Center Housing & Cover, Right Umbilical Access, Forest Grey	1115-009-G		

*If you are ordering a chair-mounted delivery unit then select "No Utility Center" because one will be included with your delivery unit

STEP 5

STEP 5: CHAIR CONTROL LOCATION - Select at least 1 chair control

Maximum of 1 control can be mounted to the delivery unit, maximum of 2 on the chair (left and right), 4 total maximum number of controls per operatory

☐	First Chair Control (Required) First control included with chair purchase	3914-998-CS	☐ Delivery Unit ☐ Footswitch ☐ Chair, right side ☐ Chair, left side
☐	Second Chair Control (Optional)	3914-999-CS	☐ Delivery Unit ☐ Footswitch ☐ Chair, right side ☐ Chair, left side

Forest Packages
Chairs and Stools
Lights and Monitor Mounts
7000 Series
Delivery Systems
Simplified
Factory Options and Parts
General Information
Equipment Warranty
Radiance Operatory
Imagine + Operatory
Operatory Mobile
Sterilization Centers
Orthodontic Cabinetry
Reception/Front Desk Cabinetry
Color Options
Cabinet Warranty
Compressors
Dry Vacuums
Tanks
Wet Vacuums
Utility Room Accessories
Utility Warranty

DESIGN YOUR FUSION OPERATORY DELIVERY UNIT

STEP 6: SELECT YOUR DELIVERY SYSTEM - *Select 1 delivery system*

	Description	Part #	Qty.	Price	Comments
☐	Fusion Delivery Head, Pivot Chair Mount	4296PI			Forest Grey paint & plastics only
☐	Fusion Delivery Head, Fixed Chair Mount with Sidebox	4295SI			Forest Grey paint & plastics only

STEP 7: CONFIGURE YOUR DELIVERY SYSTEM

Note: Please refer to ancillary and options graph in the catalog to determine number of ancillaries and options possible

Handpiece Positions / Comments
☐ Default position placement
☐ Added/optional positions

	Description	Part #	Qty.	0	1	2	3	4	5	6	
☐	Air/Water Syringe (included standard)										
☐	4-hole handpiece tubing (included standard)										
☐	5-hole system (1 tubing included, system accomodates a 2nd tubing)	1700-021-CS									
☐	- Second 5-hole tubing	0017-615-CS									
☐	6-pin system (1 tubing included, system accomodates a 2nd tubing)	1700-019-CS									
☐	- Second 6-pin tubing	0017-603-CS									
☐	Star® ETorque Electric System, Factory Installed*	STAR-ETORQUE									
☐	Star Blis-sonic™ SW Scaler (with 4 line swivel)*	STAR-BLIS-SW									
☐	Star Blis-sonic K Scaler (with fixed back-end)*	STAR-BLIS-K									
☐	Satelec SP Scaler*	SATELEC-S									
☐	Satelec SP LED Scaler*	SATELEC-S-LED									
☐	Cavitron Scaler*	CAVITRON									
☐	Additional Handpiece Position, Wet	1100-189-CS									
☐	Additional Handpiece Position, Air Drive Only	1100-190-CS									
☐	Assistant's hygiene instrumentation, control head-mounted Select 1 position for the SE and 1 position for the HVE	1408-CS		SE							
				HVE							
☐	Star Handpiece Bundle (Write-in PN and price)										
☐	Quick Disconnect w/Flow Control, 1/4" (for water)	0016-454-CS									Included with 4295SI
☐	Quick Disconnect w/Flow Control, 3/8" (for air)	0016-456-CS									Included with 4295SI
☐	Swivel Tray	1110-468									
☐	Less sidebox telescoping assistant's instrumentation	1400-000-CS									4295SI only
☐	Chrome Accents	9000-998-CS									
☐	Additional Umbilical, Per Foot (max of 9 feet)	1115-999-CS									
☐	Routing Valve Kit w/Water shutoff & Regulator, Factory inst.	1115-315-CS									Included with 4295SI
☐	Routing Valve Kit for Cuspidor, Factory Installed	1115-316-CS									

*Ancillaries utilize an existing handpiece position

STEP 8: ASSISTANT'S INSTRUMENTATION AND CUSPIDORS - *Must select 1 option for order to be valid*

☐	No Assistant's Instrumentation or Cuspidor*	N/A	
☐	Rear Pivot Instrumentation, Quad Holder Bar	1295	Not available with 4295SI
☐	Rear Pivot Instrumentation with Integrated Touchpad	1296	Not available with 4295SI
☐	Rear Pivot Instrumentation with Deluxe Cuspidor	1592	Not available with 4295SI
☐	Deluxe Cuspidor only, Rear Pivot	1582	Not available with 4295SI
☐	Basic Cuspidor, Sidebox Mounted	1679	Only available with 4295SI
☐	Deluxe Cuspidor, Sidebox Mounted	1577	Only available with 4295SI

*Sidebox mounted telescoping assistant's instrumentation included standard with 4295SI

STEP 9: ASSISTANT'S INSTRUMENTATION AND CUSPIDOR OPTIONS

☐	Quick Disconnect w/Flow Control, 1/4" (For 1095 instrumentation)	0016-455-CS	Specify One ☐ Air ☐ Water
☐	Additional Autoclavable HVE with 5' Tubing & Dry Oral Cup	1400-113-CS	
☐	Hands-Free HVE Holder with HVE and 5' Tubing	1400-279-STG	
☐	Self-Contained Clean Water System w/Quick Disconnect, 1.5L bottle (For 1095 Instrumentation only)	1700-319	
☐	Tray Assembly (For 1095 Instrumentation only)	1110-680	
☐	Deluxe Cuspidor Unit-Mounted Activation (For 1577, 1582, 1592)	1100-480-CS	
☐	Chair Control Touchpad - Mounted to 1095 Instrumentation	1700-088-CS	

Forest Packages
Chairs and Stools
Lights and Monitor Mounts
7000 Series
Delivery Systems
Simplified
Factory Options and Parts
General Information
Equipment Warranty
Radiance Operatory
Imagine + Operatory
Operatory Mobile
Sterilization Centers
Orthodontic Cabinetry
Reception/Front Desk Cabinetry
Color Options
Cabinet Warranty
Compressors
Dry Vacuums
Tanks
Wet Vacuums
Utility Room Accessories
Utility Warranty

DESIGN YOUR OPERATORY LIGHT SELECTION

STEP 10: OPERATORY LIGHT

STEP 10

Select Light Head Mounting Option - *1 light and mounting option required*

Lights with Fusion packages come in Forest Grey Only	9083 Halogen Part #	Qty	9078 LED Part #	Qty
Chair Mount	☐ 9083		☐ 9078	
Ceiling Mount	☐ 9083-CL		☐ 9078-CL	
Wall Mount	☐ 9093W		☐ 9079W	
Cabinet Mount	☐ 9093C		☐ 9079C	
Track Mount	☐ 9083T		☐ 9078T	

STEP 11: OPERATORY LIGHT CONFIGURATION AND OPTIONS

STEP 11

Chair Mounted Light Options (Pivot, Sidebox, and Fixed)

	Description	Part #	Qty
☐	20” Rigid Arm in Lieu of Standard 32” Arm	1110-227-CS	
	Light Posts (Select 1)		
☐	Sidebox, 44” Post	1110-900	
☐	Sidebox w/Monitor Cord slot, 44”	1110-170	
☐	Pivot without chair adapter (adapter included with unit purchase)	1113-654	
☐	Pivot with 3800/3900 chair adapter (when chair-mounted unit not ordered)	1113-654-CA	
	Monitor Mount Assemblies		
☐	Ring Post Mount Assembly (Must pair with either PN 1110-170 or 1110-045 above) This option allows you to have both a light and monitor mounted to your chair	1300RM	
☐	Top Post Mount Assembly (Must pair with one of the post options below) This option allows a monitor instead of a light on your chair	1300TPM	
☐	Sidebox: Monitor Post, Dual Slot, Fixed Sidebox Mount, 30”	1331-998	
☐	Pivot: Monitor in Lieu of Light Post, Pivot	1331-654	
☐	Pivot: Monitor in Lieu of Light Post, Pivot with Chair Adapter	1331-654-CA	

Ceiling Mounted Light Configuration (Select Mounting Height and Post Length)

Mounting Height (Required) ☐ 8’ ☐ 8’6” ☐ 9’ ☐ 9’6” ☐ 10’ ☐ 10’6” ☐ 11’ ☐ Custom Height, Specify:

Post Length (Required) ☐ 12” ☐ 18” ☐ 24” ☐ 30” ☐ 36” ☐ 42” ☐ 48” ☐ Custom Length (max 48”), Specify:

Cabinet and Wall Mounted Light Configuration and Options

	Description	Part #	Qty
	Arm Height (Required): ☐ Standard ☐ Tall	N/A	
	Specify Cabinet or Wall Mounting Height (write-in):	N/A	
☐	Horizontal Top Cabinet Mount in Lieu of Internal Mount	1110-881-CS	
☐	Vertical Exterior Cabinet Mount in Lieu of Internal Mount	1110-886-CS	
	Track Mounted Light Configuration and Options		
☐	Monitor Mount Assembly (specify monitor post length in next section)	1305T	
☐	S Video Cable, Pre-Installed	0014-282	
☐	RCA Cable, Pre-Installed	0014-283	

Select Track Mount Light Post Lengths

Mounting Height (Required) ☐ 8’ ☐ 8’6” ☐ 9’ ☐ 9’6” ☐ 10’ ☐ 10’6” ☐ 11’ ☐ Custom Height, Specify:

Light Post Length (Required) ☐ 8.25” ☐ 14.25” ☐ 20.25” ☐ 26.25” ☐ 32.25” ☐ 38.25” ☐ 44.25” ☐ Custom Length (max 44.25”), Specify:

Monitor Post Length (Required if 1305T selected) ☐ 20.25” ☐ 26.25” ☐ 32.25” ☐ 38.25” ☐ 44.25” ☐ 50.25” ☐ 56.25” ☐ Custom Length (max 56.25”), Specify:

Forest Packages
Chairs and Stools
Lights and Monitor Mounts
7000 Series
Delivery Systems
Simplified
Factory Options and Parts
General Information
Equipment Warranty
Radiance Operatory
Imagine + Operatory
Operatory Mobile
Sterilization Centers
Orthodontic Cabinetry
Reception/Front Desk Cabinetry
Color Options
Cabinet Warranty
Compressors
Dry Vacuums
Tanks
Wet Vacuums
Utility Room Accessories
Utility Warranty

Surface Treatments

Forest is the only dental equipment with a WOW factor. It really is a kick watching a dentist react to Forest equipment when they first see it. A common reaction is “wow, that is beautiful.”

Carbon Fiber

Control Heads
- Standard IC - Chassis
- Euro - Lid

Sidebox - Cover

Basic Cuspidor - Cover

Assistant’s Instrumentation
- 1095 - Arm Cover

Powder Coat Paint

Dentists and interior designers love being able to put something other than white into their beautiful patient friendly decors.

Control Heads
- Standard IC - Lid, Brake Handles and Holder Bar
- Euro - Chassis, Whip Arms, Brake Handles and Swivel Tray
- 7000 Series Rear Mount, Side Delivery and Mobile Cart
- 7020 PRO Series Rear Mount, Side Delivery and Mobile Cart

Sidebox - Housing

Basic Cuspidor - Housing and Holder Bar

Assistant’s Instrumentation
- 1095 - Arm
- 1096 - Arm and Integrated Holder

Ultraleather® (standard)

Once you see a Forest chair, delivery system and light package with color coordinated paint and upholstery in a well designed treatment room, you wonder why it’s taken so long for a manufacturer to offer dental equipment with a full range of surface treatments.

3900 Chair
- Plush Upholstery
- Seamless Upholstery
- Knee Pillow, Neck Pillow and Pedo Booster Seat
- Deluxe and Economy Stools

Solid Surface (standard)

Control Heads
- 7010 Series Rear Mount Side Delivery and Mobile Cart
- 7020 PRO Series Rear Mount Side Delivery and Mobile Cart
- 3486 Rear Mount Side Delivery and Mobile Cart
- 2184BC/2186BC Rear and Side Delivery

Laminate (optional)

Control Heads
- 3486 Rear Mount Side Delivery
- 2184BC/2186BC Rear and Side Delivery
- 7010 Series Rear Mount Side Delivery and Mobile Cart

Forest Packages
Chairs and Stools
Lights and Monitor Mounts
7000 Series
Delivery Systems
Simplified
Factory Options and Parts
General Information
Equipment Warranty
Radiance Operatory
Imagine + Operatory
Operatory Mobile
Sterilization Centers
Orthodontic Cabinetry
Reception/Front Desk Cabinetry
Color Options
Cabinet Warranty
Compressors
Dry Vacuums
Tanks
Wet Vacuums
Utility Room Accessories
Utility Warranty

POWDER COAT PAINT (9)

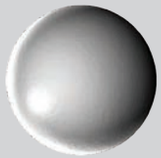

ARCTIC SILVER
Powdercoat Paint

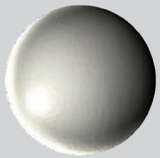

FOREST GREY
Powdercoat Paint

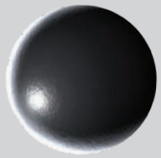

CHARCOAL
Powdercoat Paint

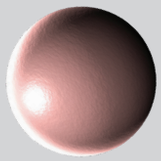

COPPER
Powdercoat Paint

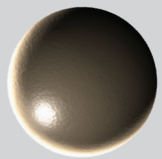

BRONZE
Powdercoat Paint

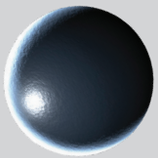

MIDNIGHT
Powdercoat Paint

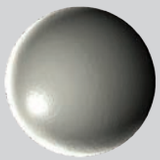

PEWTER
Powdercoat Paint

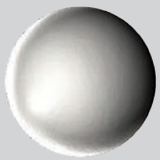

SHADOW
Powdercoat Paint

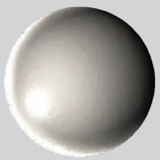

WHITE
Powdercoat Paint

CARBON FIBER (3) FORMICA® (4)

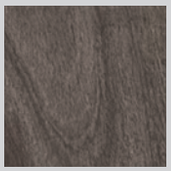

GREYWOOD
Carbon Fiber

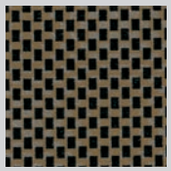

LASER LEATHER
Carbon Fiber

LEMANS
Carbon Fiber

FOLKSTONE
Formica®

OYSTER GREY
Formica®

SURF
Formica®

WHITE BLANC
Formica®

SOLID SURFACES (10)

ANTARCTICA
Corian®

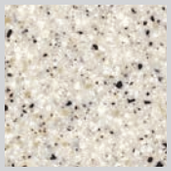

ARCTIC MELANGE
Wilsonart®

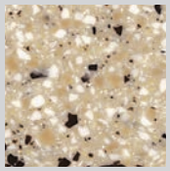

BAJA MELANGE
Wilsonart®

CINDER GRANITE
Meganite®

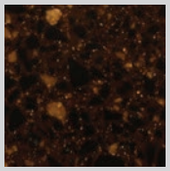

GOLDRUSH GEMSTONE
Meganite®

MOONSTONE
Meganite®

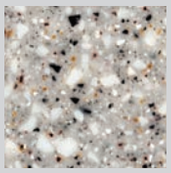

PLATINUM GRANITE
Meganite®

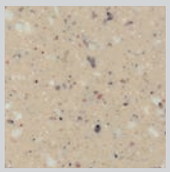

ROCKY ROAD GRANITE
Meganite®

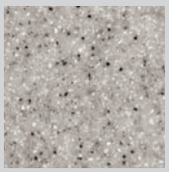

SILVER MIST
Meganite®

STARRY STARRY NIGHT
Meganite®

Forest Packages
Chairs and Stools
Lights and Monitor Mounts
7000 Series
Delivery Systems
Simplified
Factory Options and Parts
General Information
Equipment Warranty
Radiance Operatory
Imagine + Operatory
Operatory Mobile
Sterilization Centers
Orthodontic Cabinetry
Reception/Front Desk Cabinetry
Color Options
Cabinet Warranty
Compressors
Dry Vacuums
Tanks
Wet Vacuums
Utility Room Accessories
Utility Warranty

NAUGAHYDE®* (6)

*For The Fusion Packages only. Pages 22-29

BLACK NaugaHyde®	COCOA NaugaHyde®	DEEP SAPPHIRE NaugaHyde®	SADDLE NaugaHyde®	SAND NaugaHyde®	TAUPE NaugaHyde®

ULTRALEATHER®* (12 CLASSIC) (5 PEARLIZED)

*Pearlized

AUTUMN LEAF Ultraleather®	BALTIC Ultraleather®	BOYSENBERRY Ultraleather®	CHARCOAL Ultraleather®	DIPLOMAT BLUE Ultraleather®	DOE Ultraleather®
DOVE GREY Ultraleather®	PAPYRUS Ultraleather®	PARROT Ultraleather®	RAVEN WING Ultraleather®	ST. JOHN Ultraleather®	STONE Ultraleather®
MIDNIGHT* Ultraleather®	OZ* Ultraleather®	PEWTER* Ultraleather®	PHARAOH* Ultraleather®	TIN MAN* Ultraleather®	

CUSTOMIZE YOUR TREATMENT ROOMS WITH DENTALEZ

Powder coat paint your drawer and door pulls, grab handles, trash receptacles, or other metal surfaces in your treatment room to match your delivery system paint color

Source custom powder coat paint colors to match your provided sample

Special order any Ultraleather® upholstery color shown on the Ultrafabrics® website (from original or pearlized palette)

Forest Packages
Chairs and Stools
Lights and Monitor Mounts
7000 Series
Delivery Systems
Simplified
Factory Options and Parts
General Information
Equipment Warranty
Radiance Operatory
Imagine + Operatory
Operatory Mobile
Sterilization Centers
Orthodontic Cabinetry
Reception/Front Desk Cabinetry
Color Options
Cabinet Warranty
Compressors
Dry Vacuums
Tanks
Wet Vacuums
Utility Room Accessories
Utility Warranty

Forest

CHAIRS AND STOOLS

Forest Packages

Chairs and Stools

Lights and Monitor Mounts

7000 Series

Delivery Systems

Simplified

Factory Options and Parts

General Information

Equipment Warranty

Radiance Operatory

Imagine + Operatory

Operatory Mobile

Sterilization Centers

Orthodontic Cabinetry

Reception/Front Desk Cabinetry

Color Options

Cabinet Warranty

Compressors

Dry Vacuums

Tanks

Wet Vacuums

Utility Room Accessories

Utility Warranty

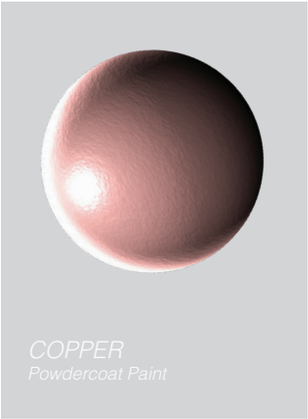

* Not a standard color

* Not a standard color

3800 CHAIR

Material: hydraulic cantilever mechanism
Benefit: smooth and steady heavy lifting

Material: cast aluminum chair back, base, armrest and headrest
Benefit: strong, impervious to fading or cracking

Material: flip down armrests
Benefit: easy patient entry and exit

Material: optional soft-touch back massage with integrated compressor
Benefit: saves central compressor capacity for delivery systems

3900 CHAIR

Material: cast aluminum chair back, chair base and utility center base
Benefit: strong, impervious to fading or cracking

Material: pressure-formed plastic chair and utility center covers
Benefit: warp, impact and stain resistant

Material: aluminum hydraulic manifold and speed adjustment screws
Benefit: independent speed adjustment of base and back both up and down

Material: optional soft-touch back massage with integrated compressor
Benefit: saves central compressor capacity for delivery systems

Material: Ultraleather® upholstery standard
Benefit: withstands heavy use and cleaning, with glove-soft leather feel

Material: Forest Grey or Shadow powder coat standard on 3900 chair
seven optional Designer Friendly® colors
Benefit: complements treatment room interior design color palette

Forest Packages
Chairs and Stools
Lights and Monitor Mounts
7000 Series
Delivery Systems
Simplified
Factory Options and Parts
General Information
Equipment Warranty
Radiance Operatory
Imagine + Operatory
Operatory Mobile
Sterilization Centers
Orthodontic Cabinetry
Reception/Front Desk Cabinetry
Color Options
Cabinet Warranty
Compressors
Dry Vacuums
Tanks
Wet Vacuums
Utility Room Accessories
Utility Warranty

3900 Hydraulic Patient Chair

Plush

Model 3900

Part Number	3900
Retail Price	**$10,463**

Seamless

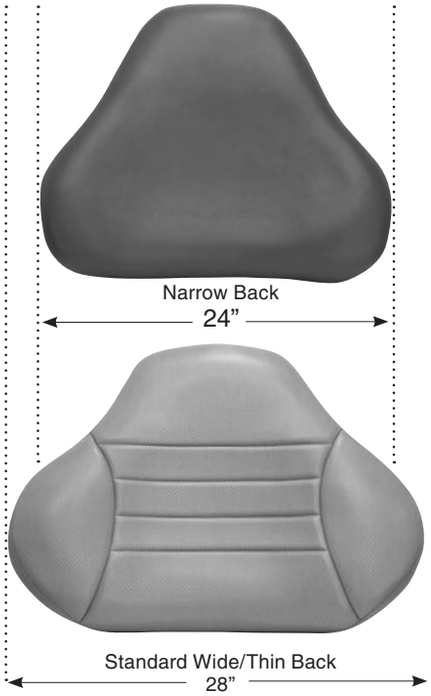

Standard Features

Hydraulic Chair 3900

Ultraleather® upholstery with
wide/thin back for elbow support
Plastic toe guard 21”
Double articulating pinch-style headrest
Thin back w/full lumbar support
Right/left patient access
Swing-down locking armrests
Hydraulic cantilever mechanism
Emergency shut-off
30 degree base rotation w/lock
Multifunction touchpad
w/4 programmable preset positions
Seat height: minimum 17” maximum 29”

! **Designer Friendly® Surface Treatments**

STEP 1 SELECT STANDARD POWDER COAT PAINT (CHAIR):

◯ Forest Grey ◯ Shadow

UPGRADE: Chair Base/Back Powder Coat Paint
UPGRADE: PRO Chair
(Less Utility Center Housing and Cover)

◯ Arctic Silver ◯ Bronze ◯ Charcoal
◯ Copper ◯ Midnight ◯ Pewter
◯ White

STEP 2 SELECT ULTRALEATHER® UPHOLSTERY COLOR CHOICES FOR CHAIR AND DELUXE /ECONOMY STOOLS:

◯ Autumn Leaf ◯ Baltic ◯ Charcoal
◯ Diplomat Blue ◯ Doe ◯ Dove Grey
◯ Boysenberry ◯ Papyrus ◯ Parrot
◯ Raven Wing ◯ Stone ◯ St. John

Pearlized Colors: ◯ Midnight ◯ Pewter ◯ Oz
◯ Pharaoh ◯ Tin Man

Δ **OR SELECT** Special Color Ultraleather (Call for leadtime)
◯ Chair 3907-999-SP

	Factory Options	Part No
	CHAIR (Forest Grey or Shadow)	3900
	CHAIR Designer Friendly®	3900C
	CHAIR PRO Designer Friendly Includes: Plush dual color and deviated/ contrast stitching upholstery, massage, contoured utility center housing and cover, knee pillow and neck pillow	3900C-PRO
	CHAIR PRO Designer Friendly less utility center housing and cover	3900C-PRO-LUC
	One chair control included (specify type below)	3914-998-CS *
	◯ Footswitch control	
	◯ Touchpad, chair-mounted	
!	Additional chair control (limit 2 on chair, limit 1 on unit)	3914-999-CS
	◯ Footswitch control	
	◯ Touchpad, chair-mounted	
	Chair adapter, fixed (for external umbilical)	1115-195
	Contoured utility center housing & cover	3900-101
	Contoured utility center housing & cover Designer Friendly	3900-101-C
!	**UPHOLSTERY SELECTIONS:**	
	Pedo booster seat (see page 40)	3907-180
	Knee pillow (see page 40)	3907-317
	Neck pillow (see page 40)	3907-318
	Soft-touch back massage option (not available with Memory Comfort)	3900-100
	Plastic toe guard 29” in lieu of 21”	3907-028-CS
!	**LIGHT POSTS** (for unit mount lights/post mount monitor assemblies see pages 46)	
	Fixed (chair adaptor sold separately) 44” light post without slot, chair mount	1110-794
	44” light post with slot for monitor cord	1110-050
	Pivot (includes pivot cast chair adaptor, bushing, bearing kit - mounts on Forest chairs only)	1113-654-CA
	Pivot monitor post, (includes pivot cast chair adapter, bushing, bearing kit - mounts on Forest chairs only) (monitor mount assembly not included)	1331-654-CA
	Monitor mount assembly, top post mount (see page 49)	1300TPM
	Monitor mount assembly, ring mount (see page 49)	1300RM

! Often overlooked
Δ Lead time varies

Forest Packages
Chairs and Stools
Lights and Monitor Mounts
7000 Series
Delivery Systems
Simplified
Factory Options and Parts
General Information
Equipment Warranty
Radiance Operatory
Imagine + Operatory
Operatory Mobile
Sterilization Centers
Orthodontic Cabinetry
Reception/Front Desk Cabinetry
Color Options
Cabinet Warranty
Compressors
Dry Vacuums
Tanks
Wet Vacuums
Utility Room Accessories
Utility Warranty

3900 Chair Upholstery Options

Memory Comfort

Narrow Back or Narrow Back with Slings

Standard Features

Memory Comfort Upholstery
Designed for all day/ultra-long procedures or greater general patient comfort
3 layers of foam topped with 1.5 inches of memory foam for extra comfort
Side-bolsters on seat cushion support legs
Memory foam headrest

Narrow Back
Perfect for Pediatric or Orthodontic dentistry
Unrestricted patient access

Narrow Back with Slings
Same as above, with additional features:
Slings provide alternative for additional patient elbow support
Slings create a barrier between patient and practitioner

Factory Options	Part No
UPHOLSTERY SELECTIONS:	
Plush selections:	
Standard back, wide/thin	3907-PL-WB
Narrow back	3907-PL-NB
Narrow back with slings	3907-PL-NS
Plush additional options:	
Contrast/deviated stitching	3907-999-DS
Dual color	3907-999-DC
Dual color with contrast/deviated stitching	
Call customer service for information (1.800.423.3555)	
Massage option	3900-100
Seamless selections:	
Standard back, wide/thin	3907-AS-WB
Narrow Back	3907-AS-NB
Narrow Back with Slings	3907-AS-NS
Seamless additional options:	
Massage option	3900-100
Memory comfort selections:	
Wide/thin	3907-MC-WB
Dual color	3907-MC-DC

ETL CLASSIFIED
Intertek
4010684

3900 Chair Equipment dimensions, see page 97
Shipping weight estimate:
335 lb / 152 kg

Forest Packages
Chairs and Stools
Lights and Monitor Mounts
7000 Series
Delivery Systems
Simplified
Factory Options and Parts
General Information
Equipment Warranty
Radiance Operatory
Imagine + Operatory
Operatory Mobile
Sterilization Centers
Orthodontic Cabinetry
Reception/Front Desk Cabinetry
Color Options
Cabinet Warranty
Compressors
Dry Vacuums
Tanks
Wet Vacuums
Utility Room Accessories
Utility Warranty

3800 Hydraulic Patient Chair

Model 3800

Part Number	3800
Retail Price	**$7,613**

Standard Features

Hydraulic Chair 3800
Naugahyde® upholstery
w/wide back for elbow support
Plastic toe guard 21”
Double articulating pinch-style headrest
Right/left patient access
Swing-down locking armrests
Hydraulic cantilever mechanism
Aluminum casting chair back, base, armrest and headrest
Emergency shut-off
30-degree swivel rotation w/lock

! **Designer Friendly® Surface Treatments**

STEP 1 SELECT STANDARD POWDER COAT PAINT (CHAIR):

◯ Forest Grey

STEP 2 SELECT NAUGAHYDE® UPHOLSTERY COLOR FOR YOUR CHAIR:

◯ Black ◯ Cocoa ◯ Deep Sapphire
◯ Saddle ◯ Sand ◯ Taupe

UPGRADE: Standard Ultraleather® upholstery (select from Forest standard options) 3807-999-UL

Δ **OR SELECT** Special Color upholstery (Call for leadtime)
Ultraleather 3807-999-UL-SP
Naugahyde 3807-999-SP

ETL CLASSIFIED
Intertek
4010684

3800 Chair Equipment dimensions, see page 96
305 lb / 152 kg

	Factory Options	Part No
	CHAIR (pre-tubed)	3800PT
	CHAIR (non-tubed)	3800
	One chair control included (specify type below)	3914-998-CS
	◯ Footswitch control	
	◯ Touchpad, chair-mounted	
!	Additional chair control (limit 2 on chair, limit 1 on unit)	3914-999-CS
	◯ Footswitch control	
	◯ Touchpad, chair-mounted	
	Chair adapter, fixed (for external umbilical)	1115-195
	Deluxe utility center housing and cover, rear umbilical access	1115-007-G
	Deluxe utility center housing and cover, right umbilical access	1115-009-G
!	**UPHOLSTERY SELECTIONS (only available in ultraleather):**	
	Pedo booster seat (see page 40)	3907-180
	Knee pillow (see page 40)	3907-317
	Neck pillow (see page 40)	3907-318
!	**LIGHT POSTS** (for unit mount lights/post mount monitor assemblies see pages 46)	
	Fixed (chair adaptor sold separately) 44” light post without slot, chair mount	1110-794
	44” light post with slot for monitor cord	1110-050
	Pivot (includes pivot cast chair adaptor, bushing, bearing kit - mounts on Forest chairs only)	1113-654-CA
	Pivot monitor post, (includes pivot cast chair adapter, bushing, bearing kit - mounts on Forest chairs only) (monitor mount assembly not included)	1331-654-CA
	Monitor mount assembly, top post mount (see page 49)	1300TPM
	Monitor mount assembly, ring mount (see page 49)	1300RM

! Often overlooked
Δ Lead time varies

Forest Packages
Chairs and Stools
Lights and Monitor Mounts
7000 Series
Delivery Systems
Simplified
Factory Options and Parts
General Information
Equipment Warranty
Radiance Operatory
Imagine + Operatory
Operatory Mobile
Sterilization Centers
Orthodontic Cabinetry
Reception/Front Desk Cabinetry
Color Options
Cabinet Warranty
Compressors
Dry Vacuums
Tanks
Wet Vacuums
Utility Room Accessories
Utility Warranty

Chair Accessories

Neck Pillow

3907-318

Provides ergonomic support for patients with neck discomfort and/or during long procedures.

Neck support offers patients a comfortable relaxed experience.

Specify Ultraleather® upholstery color

Knee Pillow

3907-317

Knee support ideal for patients with joint discomfort and/or long procedures.

Zero gravity posture, eliminates pressure on knees.

Specify Ultraleather upholstery color

3900 dual color upholstery option (upcharge)	3907-317-DC
3900 contrast/deviated stitching option (upcharge)	3907-317-DS

Pedo Booster Seat (to accommodate smaller patients)

3907-180

A cushion that takes the lumbar out of the chair, essentially turning it into a bed, ideal for children.

Specify Ultraleather upholstery color

3900/3800 Chair Control, Footswitch

Additional Chair Control, Footswitch

Factory installed	3914-998-CS
Factory installed	3914-999-CS
After Market	3914-010-SH

4 programmable preset positions

3900/3800 Remote Mount Touchpad with 25' Cable

FIXED HORIZONTAL MOUNT	
White	1700-079
Forest Grey	1700-079-G
Designer Friendly® (specify color)	1700-079-C
SWING HORIZONTAL MOUNT	
White	1700-089-HM
Forest Grey	1700-089-HM-G
Designer Friendly (specify color)	1700-089-HM-C
SWING VERTICAL MOUNT	
White	1700-089-VM
Forest Grey	1700-089-VM-G
Designer Friendly (specify color)	1700-089-VM-C

• 4 programmable preset positions

3900 Contoured Utility Center Housing & Cover

Factory option:	3900-101
Forest Grey	3900-101-G
Shadow	3900-101-SH
Designer Friendly (specify color)	3900-101-C

Included w/4486PI, 4485SI, 4987SI and 4988PI chair mounted packages

Forest Packages
Chairs and Stools
Lights and Monitor Mounts
7000 Series
Delivery Systems
Simplified
Factory Options and Parts
General Information
Equipment Warranty
Radiance Operatory
Imagine + Operatory
Operatory Mobile
Sterilization Centers
Orthodontic Cabinetry
Reception/Front Desk Cabinetry
Color Options
Cabinet Warranty
Compressors
Dry Vacuums
Tanks
Wet Vacuums
Utility Room Accessories
Utility Warranty

Economy and Deluxe Stools

Nomenclature Key	Example
C = Ultraleather	6157C
V = Naugahyde	6156V

Model 6156
Part Number 6156C
Part Number 6156V

Model 6157
Part Number 6157C
Part Number 6157V

Model 6159
Part Number 6159C
Part Number 6159V

Model 6160
Part Number 6160C
Part Number 6160V

Model 6161
Part Number 6161C
Part Number 6161V

Standard Features

Economy and Deluxe Stools
Ultraleather® or Naugahyde® Upholstery
Injection molded foam
5-leg fully polished base
Twin wheel hard floor casters
Accommodates maximum of 300 lbs.

Doctor's Economy 6156C/6156V
Backrest, non-adjusting
Round seat with single lever height adjustment
Pneumatic cylinder height adjustment, 18" - 23"

Assistant's Economy 6157C/6157V
Round seat with single lever height adjustment
Torso support, non-ratcheting, with height adjustment
Pneumatic cylinder height adjustment, 21 1/2" - 28"
Foot ring affixed to base

Doctor's Deluxe 6159C/6159V
Backrest with height adjustment
Contoured seat with triple lever adjustment
Pneumatic cylinder height adjustment, 18 1/2" - 23"

Assistant's Deluxe 6160C/6160V
Contoured seat with single lever adjustment
Torso support with ratcheting and height adjustment
Pneumatic cylinder height adjustment, 21 1/2" - 28"
Foot ring with adjustment

Assistant's Deluxe with Back 6161C/6161V
Backrest with height adjustment
Contoured seat with triple lever adjustment
Torso support with ratcheting and height adjustment
Pneumatic cylinder height adjustment, 21 1/2" - 28"
Foot ring with adjustment

Equipment dimensions, see page 97
Shipping weight estimate:

6156/6159	35 lb / 15 kg
6161	45 lb / 21 kg
6157/6160	40 lb / 18 kg

Factory Options

	STOOL	MODEL CHOICE	Part No
Δ	Special color upholstery (upcharge)		6007-999-SP
!	**CYLINDER CHOICES:**		
	Doctor's short cylinder, 16 " – 21" (6156C/6159C)		6000-628-CS
	Doctor's tall cylinder, 21 1/2" – 28" (6156C/6159C) foot ring with support highly recommended		6000-604-CS
	Assistant's short cylinder, 18" – 23" (6157C/6160C/6161C)		6000-605-CS
	Foot ring with support (6156C/6159C)		6000-602

! Often overlooked
* Specify vinyl manufacturer and color
(not all colors may be available.)
(Call Forest for ordering details 1-800-423-3555.)
Δ Lead time varies

! **Designer Friendly® Surface Treatments**

STEP 1 SELECT ULTRALEATHER® UPHOLSTERY COLOR CHOICES FOR CHAIR AND DELUXE /ECONOMY STOOLS:

◯ Autumn Leaf ◯ Baltic ◯ Charcoal ◯ Diplomat Blue ◯ Doe ◯ Dove Grey
◯ Boysenberry ◯ Papyrus ◯ Parrot ◯ Raven Wing ◯ Stone ◯ St. John
Pearlized Colors: ◯ Midnight ◯ Pewter ◯ Pharaoh ◯ Oz ◯ Tin Man

OR SELECT NAUGAHYDE® UPHOLSTERY COLOR:

◯ Black ◯ Cocoa ◯ Deep Sapphire ◯ Saddle ◯ Sand ◯ Taupe

OR SELECT Special Color Ultraleather® (Call for leadtime)

◯ Deluxe/Economy Stool 6007-999-SP

Forest Packages
Chairs and Stools
Lights and Monitor Mounts
7000 Series
Delivery Systems
Simplified
Factory Options and Parts
General Information
Equipment Warranty
Radiance Operatory
Imagine + Operatory
Operatory Mobile
Sterilization Centers
Orthodontic Cabinetry
Reception/Front Desk Cabinetry
Color Options
Cabinet Warranty
Compressors
Dry Vacuums
Tanks
Wet Vacuums
Utility Room Accessories
Utility Warranty

Comfort Stools

Model 6176

Part Number 6176

Model 6187

Part Number 6187

Standard Features

Comfort Stools
Air circulating weave construction
Active tilt® seat (actively moves with user)
Tilt seat lever function
Contoured seat
5-leg base
Twin wheel hard floor casters
Accommodates maximum of 300 lbs.

Doctor's Comfort 6176
Triple lever adjustment - independent back and seat
Backrest with angle & height adjustment
Pneumatic cylinder height adjustment,
19 1/4"– 24 1/2"

Assistant's Comfort 6187
Triple lever adjustment - independent back and seat
Backrest with angle & height adjustment
Fully adjustable ratcheting assistant arm
Foot ring with height adjustment
Pneumatic cylinder height adjustment, 23"– 30 1/2"

Factory Options

	STOOL	MODEL CHOICE	Part No
!	Cylinder choices:		
	Doctor's/Office short cylinder, 16 " – 21" (6176)		6000-628-CS
	Doctor's/Office tall cylinder, 21 1/2" – 28" (6176) foot ring with support highly recommended		6000-604-CS
	Assistant's short cylinder, 18" – 23" (6187)		6000-605-CS
	Foot ring with support (6176)		6000-602

! Often overlooked

Equipment dimensions, see page 97
Shipping weight estimate:
6176 48 lb / 23 kg
6187 60 lb / 28 kg

Forest Packages
Chairs and Stools
Lights and Monitor Mounts
7000 Series
Delivery Systems
Simplified
Factory Options and Parts
General Information
Equipment Warranty
Radiance Operatory
Imagine + Operatory
Operatory Mobile
Sterilization Centers
Orthodontic Cabinetry
Reception/Front Desk Cabinetry
Color Options
Cabinet Warranty
Compressors
Dry Vacuums
Tanks
Wet Vacuums
Utility Room Accessories
Utility Warranty

Forest

LIGHTS AND MONITOR MOUNTS

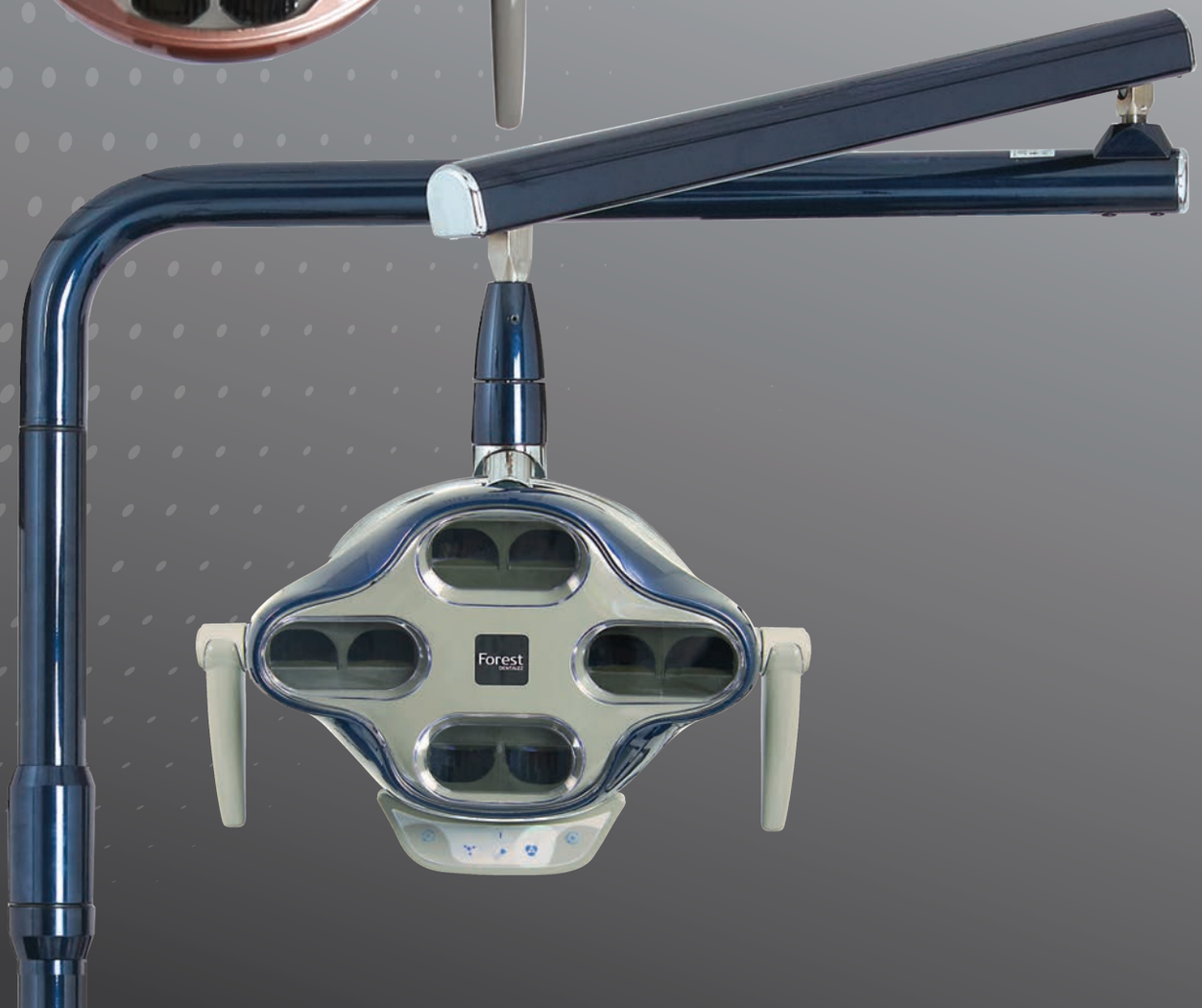

Forest Packages

Chairs and Stools

Lights and Monitor Mounts

7000 Series

Delivery Systems

Simplified

Factory Options and Parts

General Information

Equipment Warranty

Radiance Operatory

Imagine + Operatory

Operatory Mobile

Sterilization Centers

Orthodontic Cabinetry

Reception/Front Desk Cabinetry

Color Options

Cabinet Warranty

Compressors

Dry Vacuums

Tanks

Wet Vacuums

Utility Room Accessories

Utility Warranty

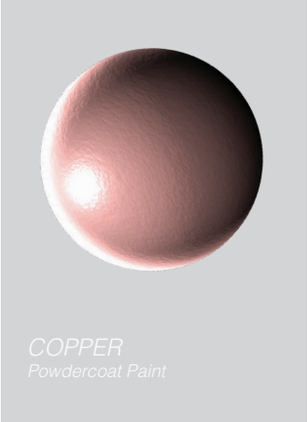

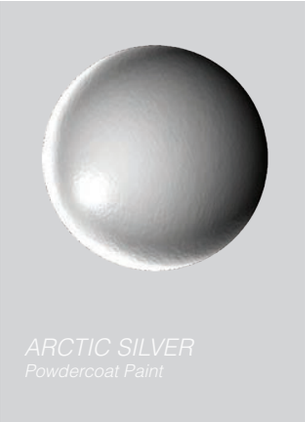

HALOGEN

Material: reflector material embedded into glass | Lexan light shield
Benefit: reflector will not peel or crack | shield is scratch resistant

Material: oil impregnated bronze bushing | 3-axis light head joint
Benefit: no light drift | 3-axis light keeps light pattern parallel w/the long axis of mouth while freeing up space above patient's head

LED

Material: energy efficient LED lamps
Benefit: creates a light pattern with feathered edges reducing eye fatigue
consumes approximately 75% less power than halogen lights | no heat
22 -year projected LED life span

Material: cast aluminum light head
Benefit: allows for nine Designer Friendly® powder coat paint colors

Forest Packages
Chairs and Stools
Lights and Monitor Mounts
7000 Series
Delivery Systems
Simplified
Factory Options and Parts
General Information
Equipment Warranty
Radiance Operatory
Imagine + Operatory
Operatory Mobile
Sterilization Centers
Orthodontic Cabinetry
Reception/Front Desk Cabinetry
Color Options
Cabinet Warranty
Compressors
Dry Vacuums
Tanks
Wet Vacuums
Utility Room Accessories
Utility Warranty

Post Mount Lights

Model 9083
Halogen Light
Part Number 9083

Model 9078
LED Light
Part Number 9078

Model 9073
LED Light
Part Number 9073

Standard Features

Halogen Light 9083
Automatic on/off activation w/override
3-Axis light head movement
Additional bulb
Color shade matching temperature setting
4200 to 5500 Kelvin
Designer Friendly® powder coat paint light head

LED Light 9078
Automatic on/off activation w/override
3-Axis light head movement
Easy release autoclavable handles
Light source 10 LED lamps
Color temperature, 4,200 to 6,000 Kelvin
Designer Friendly powder coat paint light head

LED Light 9073
Automatic on/off activation w/override
3-Axis light head movement
Six-mode, polycarbonate button keyboard
Easy release autoclavable handles
Light source 8 1-watt LED lamps
Color temperature, 4,200 to 6,000 Kelvin
Designer Friendly powder coat paint light head

Factory Options	Part No
LIGHT **MODEL CHOICE**	_____
Replacement bulb (9083/9093)	0014-300
Short rigid arm 20” in lieu of standard 32”	1110-227-CS
LIGHT POSTS:	
44” with slot for sidebox access	1110-900
44” without slot, chair mount	1110-794
35” with post clamp	1110-820
Pivot (mounts on Forest 3900/3800 chair only) (does not include cast chair adapter)	1113-654
Pivot (includes 3900/3800 cast chair adapter)	1113-654-CA
LIGHT POSTS, WITH MONITOR CORD SLOT:	
44” with dual slot for sidebox access	1110-170
44” with single slot, chair mount	1110-050
35” with single slot & post clamp	1110-045

! Designer Friendly® Surface Treatments

STEP 1 SELECT POWDER COAT PAINT FOR UNIT & LIGHT

◯ Arctic Silver ◯ Bronze ◯ Charcoal ◯ Copper
◯ Forest Grey ◯ Midnight ◯ Pewter ◯ Shadow ◯ White

CLASSIFIED c UL US

Equipment dimensions, see page 98
Shipping weight estimate:
35 lb / 16 kg

Forest Packages
Chairs and Stools
Lights and Monitor Mounts
7000 Series
Delivery Systems
Simplified
Factory Options and Parts
General Information
Equipment Warranty
Radiance Operatory
Imagine + Operatory
Operatory Mobile
Sterilization Centers
Orthodontic Cabinetry
Reception/Front Desk Cabinetry
Color Options
Cabinet Warranty
Compressors
Dry Vacuums
Tanks
Wet Vacuums
Utility Room Accessories
Utility Warranty

Track Mount Lights

Model 9083T
Halogen Light/Track
Shown with Optional 1305T Monitor Mount
Part Number 9083T

Model 1305T
Monitor Mount
Monitor Screen and Track Not Included
Part Number 1305T

Model 9078T
LED Light/Track
Part Number 9078T

Model 9073T
LED Light/Track
Part Number 9073T

Standard Features

Light and Track Assembly
Pre-wired through flex arm
Track/Trolly assembly
Vertical light tube w/6 inch horizontal
side offset for clearance of optional monitor
Flex arm & light head assembly
Trolley mounting plate and shroud
! Drop post (specify mounting height)

Monitor Mount Assembly
Pre-wired from track through flex arm
Low voltage wiring (2 conductor 18 awg wire)
HDMI shielded cable
Lower positioning handle

Monitor Requirements:
12 volt w/power supply
weight: up to 18 lbs max, width of 19”

CLASSIFIED c UL us

Equipment dimensions, see page 98
Shipping weight estimate:
Light/track 115 lb / 53 kg
1305T 140 lb / 64 kg (includes mount/track light weight)

Factory Options

LIGHT / TRACK	MODEL CHOICE _____
Monitor mount assembly	1305T
Replacement bulb (9083/9093)	0014-300
S Video, cable pre-installed	0014-282
RCA cables (3 conductor), pre-installed	0014-283

! Often overlooked

Part No

! **Standard Mounting Options**

STEP 1 CHOOSE YOUR STANDARD MOUNTING OPTION:

MOUNTING HEIGHT:	LIGHT POST LENGTH:	MONITOR POST LENGTH:
◯ 8’	◯ 8.25”	◯ 20.25”
◯ 8’ 6”	◯ 14.25”	◯ 26.25”
◯ 9'	◯ 20.25”	◯ 32.25”
◯ 9’ 6”	◯ 26.25”	◯ 38.25”
◯ 10’	◯ 32.25”	◯ 44.25”
◯ 10’ 6”	◯ 38.25”	◯ 50.25”
◯ 11’	◯ 44.25”	◯ 56.25”

◯ _____ Custom mounting height ◯ _____* Custom Post Length ◯ _____* Custom Post Length
* Cannot exceed 44.25” and 56.25”

! **Designer Friendly® Surface Treatments**

STEP 2 SELECT POWDER COAT PAINT FOR UNIT & LIGHT:

◯ Arctic Silver ◯ Bronze ◯ Charcoal ◯ Copper
◯ Forest Grey ◯ Midnight ◯ Pewter ◯ Shadow ◯ White

Forest Packages
Chairs and Stools
Lights and Monitor Mounts
7000 Series
Delivery Systems
Simplified
Factory Options and Parts
General Information
Equipment Warranty
Radiance Operatory
Imagine + Operatory
Operatory Mobile
Sterilization Centers
Orthodontic Cabinetry
Reception/Front Desk Cabinetry
Color Options
Cabinet Warranty
Compressors
Dry Vacuums
Tanks
Wet Vacuums
Utility Room Accessories
Utility Warranty

Ceiling Mount Lights

Model 9078-CL
LED Light

Part Number 9078-CL

Model 9083-CL
Halogen Light

Part Number 9083-CL

Model 9073-CL
LED Light

Part Number 9073-CL

Standard Features

Lights
Ceiling mounting plate and shroud w/drop post
! Specify mounting height

Halogen Light 9083-C
Automatic on/off activation w/override
3-Axis light head movement
Additional bulb
Color temperature, 5,500 Kelvin
Designer Friendly® powder coat paint light head

LED Light 9078-C
Automatic on/off activation w/override
3-Axis light head movement
Easy release autoclavable handles
Light source 10 LED lamps
Color temperature, 4,200 to 6,000 Kelvin
Designer Friendly powder coat paint light head

LED Light 9073-C
Automatic on/off activation w/override
3-Axis light head movement Six-mode
Polycarbonate button keyboard
Easy release autoclavable handles
Light source 8 1-watt LED lamps
Color temperature, 4,200 to 6,000 Kelvin
Designer Friendly powder coat paint light head

CLASSIFIED c UL us

Equipment dimensions, see page 98
Shipping weight estimate:
50 lb / 23 kg

Factory Options

		Part No
LIGHT	**MODEL CHOICE** _____	
Replacement bulb (9083/9093)		0014-300

! Often overlooked

! Standard Mounting Options

STEP 1 CHOOSE YOUR STANDARD MOUNTING OPTION:

MOUNTING HEIGHT:	POST LENGTH:
◯ 8’	12”
◯ 8’ 6”	18”
◯ 9’	24”
◯ 9’ 6”	30”
◯ 10’	36”
◯ 10’ 6”	42”
◯ 11’	48”
◯ _____ Custom mounting height	◯ _____* Custom post length

* Cannot exceed 48”

! Designer Friendly® Surface Treatments

STEP 2 SELECT POWDER COAT PAINT FOR UNIT & LIGHT:

◯ Arctic Silver ◯ Bronze ◯ Charcoal ◯ Copper
◯ Forest Grey ◯ Midnight ◯ Pewter ◯ Shadow ◯ White

Forest Packages
Chairs and Stools
Lights and Monitor Mounts
7000 Series
Delivery Systems
Simplified
Factory Options and Parts
General Information
Equipment Warranty
Radiance Operatory
Imagine + Operatory
Operatory Mobile
Sterilization Centers
Orthodontic Cabinetry
Reception/Front Desk Cabinetry
Color Options
Cabinet Warranty
Compressors
Dry Vacuums
Tanks
Wet Vacuums
Utility Room Accessories
Utility Warranty

Cabinet and Wall Mount Lights

Model 9079C
(Standard) 9079C-T (Tall)
LED Cabinet

Part Number 9079C

Model 9079W
(Standard) 9079W-T (Tall)
LED Wall

Part Number 9079W

Model 9074C
(Standard) 9074C-T (Tall)
LED Cabinet

Part Number 9074C

Model 9093C
(Standard) 9093C-T (Tall)
Halogen Cabinet

Part Number 9093C

Model 9093W
(Standard) 9093W-T (Tall)
Halogen Wall

Part Number 9093W

Model 9074W
(Standard) 9074W-T (Tall)
LED Wall

Part Number 9074W

Standard Features

Lights
Cabinet mount, internal vertical mount w/post
Wall mount, vertical mounting plate
Standard rigid arm
Tall rigid arm (additional 1' drop)

Halogen Light 9093
Automatic on/off activation w/override
3-Axis light head movement
Additional bulb
Color shade matching temperature
setting 4200 to 5500 Kelvin
Designer Friendly® powder coat paint light head

LED Light 9079
Automatic on/off activation w/override
3-Axis light head movement
Easy release autoclavable handles
Light source 10 LED lamps
Color temperature, 4,200 to 6,000 Kelvin
Designer Friendly powder coat paint light head

LED Light 9074
Automatic on/off activation w/override
3-Axis light head movement Six-mode
Polycarbonate button keyboard
Easy release autoclavable handles
Light source 8 1-watt LED lamps
Color temperature, 4,200 to 6,000 Kelvin
Designer Friendly powder coat paint light head

CLASSIFIED C UL US

Equipment dimensions, see page 99
Shipping weight estimate:
Cabinet 60 lb / 28 kg
Wall 65 lb / 30 kg

Factory Options		Part No
LIGHT	**MODEL CHOICE**	_____
Replacement bulb (9083/9093)		0014-300
Cabinet mounting options: (for dimensions see page 95)		
Horizontal top cabinet mount in lieu of internal mount		1110-881-CS
Vertical exterior cabinet mount in lieu of internal mount		1110-886-CS

! **** SPECIFY CABINET/WALL MOUNTING HEIGHT **** _____

! Often overlooked

! Designer Friendly® Surface Treatments

STEP 1 SELECT POWDER COAT PAINT FOR UNIT & LIGHT:

◯ Arctic Silver ◯ Bronze ◯ Charcoal ◯ Copper
◯ Forest Grey ◯ Midnight ◯ Pewter ◯ Shadow ◯ White

Forest Packages
Chairs and Stools
Lights and Monitor Mounts
7000 Series
Delivery Systems
Simplified
Factory Options and Parts
General Information
Equipment Warranty
Radiance Operatory
Imagine + Operatory
Operatory Mobile
Sterilization Centers
Orthodontic Cabinetry
Reception/Front Desk Cabinetry
Color Options
Cabinet Warranty
Compressors
Dry Vacuums
Tanks
Wet Vacuums
Utility Room Accessories
Utility Warranty

Monitor Mount Assemblies

Model 1300RM Ring Post Mount

Part Number 1300RM

Model 1300TPM Top Post Mount

Part Number 1300TPM

Monitor Screens And Chair-Mounted Posts Not Included

Standard Features

Mount Assembly, Ring Post Mount 1300RM
ICW Quicklink monitor mount
Rex positioning handles
22” ring mount rigid arm

Monitor Mount Assembly, Top Post Mount 1300TPM
ICW Quicklink monitor mount
Rex positioning handles
22” top post mount rigid arm

Monitor Requirements:
12 volt with power supply
Weight: 8 1/2 to 13 lbs max, width of 19”

Factory Options	Part No
MONITOR MOUNT ASSEMBLY	**MODEL CHOICE** _____
! Light Post (1300RM):	
44” with dual slot, fixed sidebox mount, with Forest light bushing	1110-170
35” with slot & post clamp, fixed mount, with Forest light bushing	1110-045
Pivot light posts & requirements	(call to order)
! **MONITOR POST (1300TPM):**	
30” with dual slot, fixed sidebox mount, with Oilite bushing	1331-998
Pivot monitor posts & requirements	(call to order)
30” with slot & post clamp, fixed mount, with Oilite bushing	1331-997

! Often overlooked

! Designer Friendly® Surface Treatments

STEP 1 SELECT POWDER COAT PAINT FOR UNIT & LIGHT:

◯ Arctic Silver ◯ Bronze ◯ Charcoal ◯ Copper
◯ Forest Grey ◯ Midnight ◯ Pewter ◯ Shadow ◯ White

Equipment dimensions, see page 99
Shipping weight estimate:
1300RM, 1300TPM 15 lb / 7 kg

Forest Packages
Chairs and Stools
Lights and Monitor Mounts
7000 Series
Delivery Systems
Simplified
Factory Options and Parts
General Information
Equipment Warranty
Radiance Operatory
Imagine + Operatory
Operatory Mobile
Sterilization Centers
Orthodontic Cabinetry
Reception/Front Desk Cabinetry
Color Options
Cabinet Warranty
Compressors
Dry Vacuums
Tanks
Wet Vacuums
Utility Room Accessories
Utility Warranty

Notes

Forest Packages
Chairs and Stools
Lights and Monitor Mounts
7000 Series
Delivery Systems
Simplified
Factory Options and Parts
General Information
Equipment Warranty
Radiance Operatory
Imagine + Operatory
Operatory Mobile
Sterilization Centers
Orthodontic Cabinetry
Reception/Front Desk Cabinetry
Color Options
Cabinet Warranty
Compressors
Dry Vacuums
Tanks
Wet Vacuums
Utility Room Accessories
Utility Warranty

Forest
7000 SERIES

Forest Packages

Chairs and Stools

Lights and Monitor Mounts

7000 Series

Delivery Systems

Simplified

Factory Options and Parts

General Information

Equipment Warranty

Radiance Operatory

Imagine + Operatory

Operatory Mobile

Sterilization Centers

Orthodontic Cabinetry

Reception/Front Desk Cabinetry

Color Options

Cabinet Warranty

Compressors

Dry Vacuums

Tanks

Wet Vacuums

Utility Room Accessories

Utility Warranty

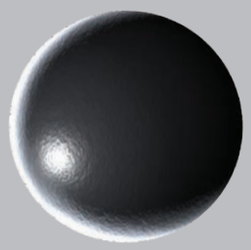

CHARCOAL
Powdercoat Paint

STARRY STARRY NIGHT
Meganite®

7000 SERIES REAR MOUNT SIDE DELIVERY

Material: all metal control head chassis
Benefit: resistant to UV and cleaners

Material: hinged solid surface lid
Benefit: long-lasting surface gives easy access to ancillary products

Material: optional exclusive brass handpiece lockout valves
Benefit: allows assistant to remove a handpiece from its holder to change a bur while dentist continues working

Material: four steel mounting configurations
Benefit: wall, under cabinet, beneath counter and cart

Material: secondary aluminum work surface
Benefit: dedicated work surface for bur block, electric handpiece attachment, mirror, explorer

Material: steel height adjust mechanism
Benefit: adjustable work surface and handpiece delivery arm height

Forest Packages
Chairs and Stools
Lights and Monitor Mounts
7000 Series
Delivery Systems
Simplified
Factory Options and Parts
General Information
Equipment Warranty
Radiance Operatory
Imagine + Operatory
Operatory Mobile
Sterilization Centers
Orthodontic Cabinetry
Reception/Front Desk Cabinetry
Color Options
Cabinet Warranty
Compressors
Dry Vacuums
Tanks
Wet Vacuums
Utility Room Accessories
Utility Warranty

Cabinetry Mounting Configurations

Made for Each Other

From the ground up, Forest delivery systems are designed for easy cabinet integration.

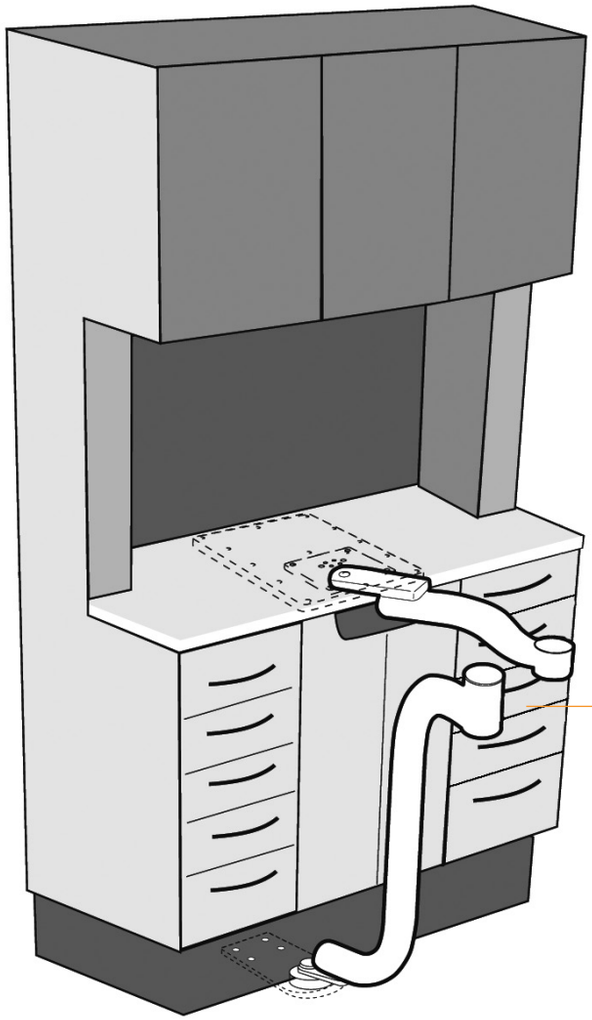

7000 Series Beneath Counter Mount (BC)

Start with a strong foundation

- Your choice of 3/4” hardened steel 11” x 14-1/2” or optional 10” x 24” mounting plate that bolts to the bottom of your counter top
- Followed by a 6” x 6” leveling plate and a set of needle roller bearings with friction adjustment.
- Durable 2-1/2” steel tube dual arm assembly with needle roller bearings installed between pivoting arm sections.

7000 Series Under Cabinet Floor Mount (UC)

Start with a strong foundation

- Low profile 1/2” steel floor mount plate allows room for your stool casters.
- Needle roller bearings with friction adjustment eliminates drift.
- Durable 2-1/2” steel tube post and arm assembly with needle roller bearings installed between pivoting sections.

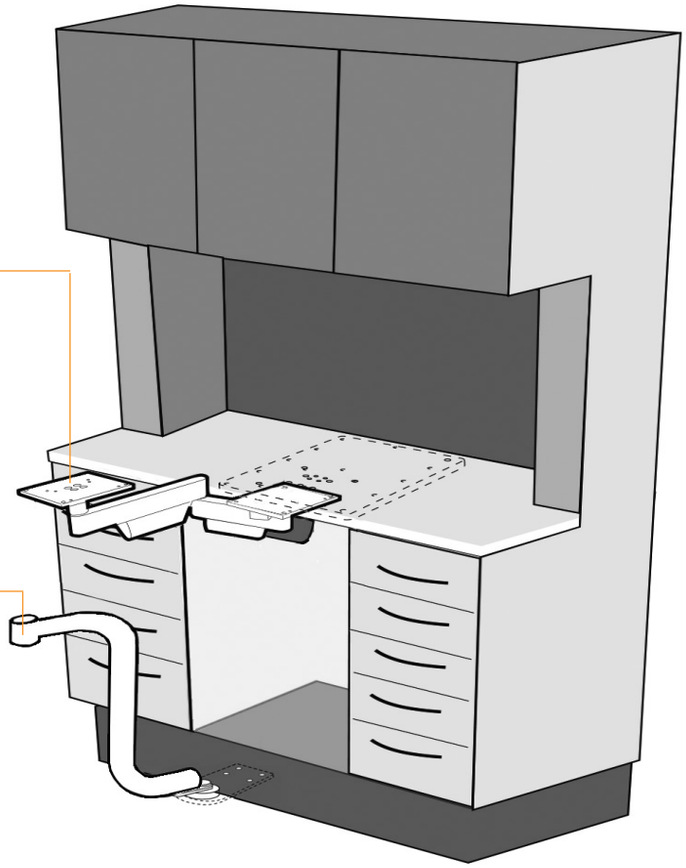

3486 Beneath Counter Mount (BC)

Start with a strong foundation

- Your choice of 3/4” hardened steel 11” x 14-1/2” or optional 10” x 24” mounting plate that bolts to the bottom of your counter top.
- Followed by a 6” x 6” leveling plate with friction adjustment.

3486 Under Cabinet Floor Mount (UC)

- Low profile 1/2” steel floor mount plate allows room for your stool casters.
- Needle roller bearings with friction adjustment eliminates drift.
- Durable 2-1/2” steel tube post and arm assembly with needle roller bearings installed between pivoting sections.

Forest Packages
Chairs and Stools
Lights and Monitor Mounts
7000 Series
Delivery Systems
Simplified
Factory Options and Parts
General Information
Equipment Warranty
Radiance Operatory
Imagine + Operatory
Operatory Mobile
Sterilization Centers
Orthodontic Cabinetry
Reception/Front Desk Cabinetry
Color Options
Cabinet Warranty
Compressors
Dry Vacuums
Tanks
Wet Vacuums
Utility Room Accessories
Utility Warranty

7020PRO Duo Swing Delivery System

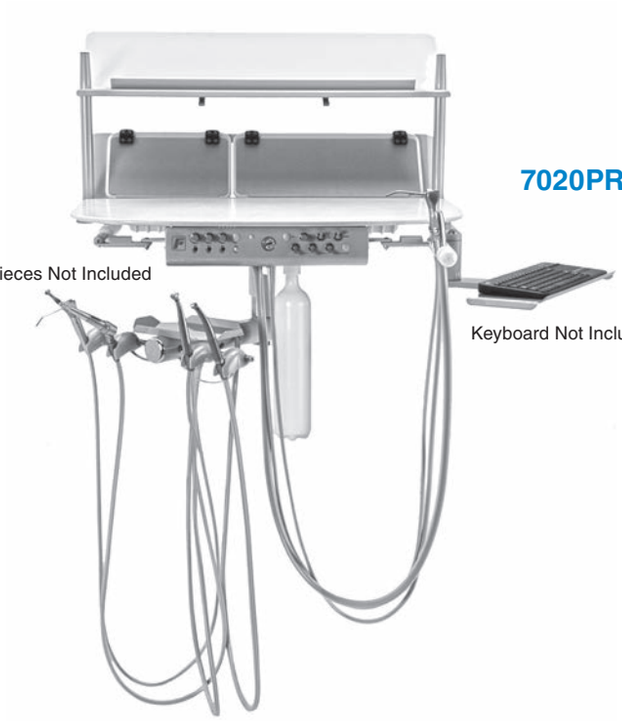

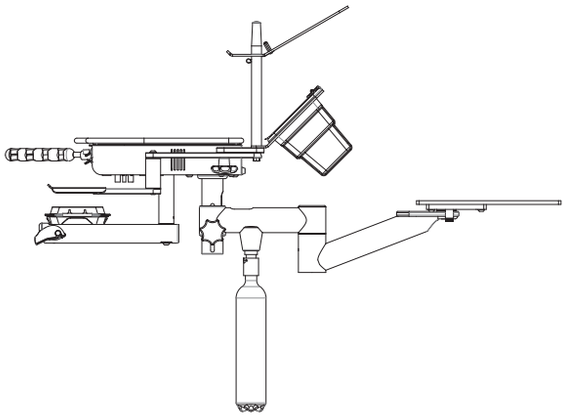

Model 7020PRO-BC

Beneath Counter Mount

Part Number 7020PRO-BC

Universal heavy-duty mounting plate 11” x 14 1/2” included (mounts to under counter)
Specify Cabinet Manufacturer

Standard Features

Duo Delivery System 7020PRO Base Model

Duo control
- automatic control for three handpieces
- handpiece lockouts
- 3-way air water syringe w/tubing, 5’
- 4-hole handpiece tubing, 5’,
- pneumatic master control block w/diaphragm
- master on/off
- individual handpiece pressure adjustment
- individual water coolant adjustment
- non-retraction water coolant
- air coolant adjustment
- handpiece flush
- handpiece exhaust canister/oil collector
- wet/dry foot control

Self-contained clean water system w/quick disconnect, single bottle, 1 1/2 liter
“Burr Buddy” tray holder and covered Zirc tray
Chrome accents
Central vacuum accessory package
- central vacuum canister with disposable solids collector
- 3-way air/water syringe w/tubing, 5’
- autoclavable standard HVE lever valve w/tubing, 5’
- autoclavable saliva ejector lever valve w/tubing, 5’
- dual assistant’s quad holder assembly

Solid work surface, 17” x 30”
Pneumatic work surface easy lift/close mechanism
Height adjustable work surface, 5”
Large and small organizer bins w/frame, dividers and sharps container
Procedure shelf
Keyboard tray
Stainless trash/CPU tray (MC)
Universal heavy duty mounting plate 11” x 14 1/2”, beneath counter (BC)
Wall mount panel 16” x 18” (WM)
Standard utility center housing and cover (MC)
Air pressure regulator w/filter
Master air shut-off valve
Umbilical, 6’

Beneath Counter Mount

Mobile Cart

Under Cabinet Floor Mount

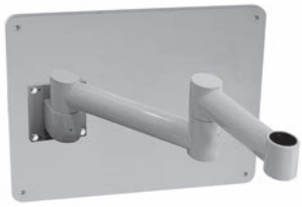

Wall Mount

Mounting plate dimensions, see pages 100
Shipping weight estimate:
7020PRO BC, MC, UC, WM 100 lb / 46 kg

Forest Packages
Chairs and Stools
Lights and Monitor Mounts
7000 Series
Delivery Systems
Simplified
Factory Options and Parts
General Information
Equipment Warranty
Radiance Operatory
Imagine + Operatory
Operatory Mobile
Sterilization Centers
Orthodontic Cabinetry
Reception/Front Desk Cabinetry
Color Options
Cabinet Warranty
Compressors
Dry Vacuums
Tanks
Wet Vacuums
Utility Room Accessories
Utility Warranty

7020PRO Duo Swing Delivery System

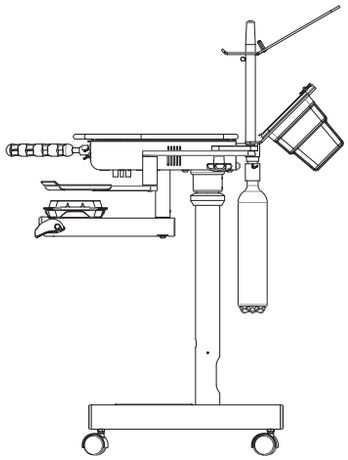

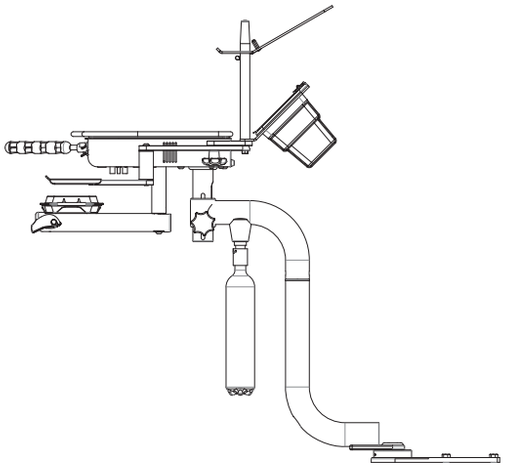

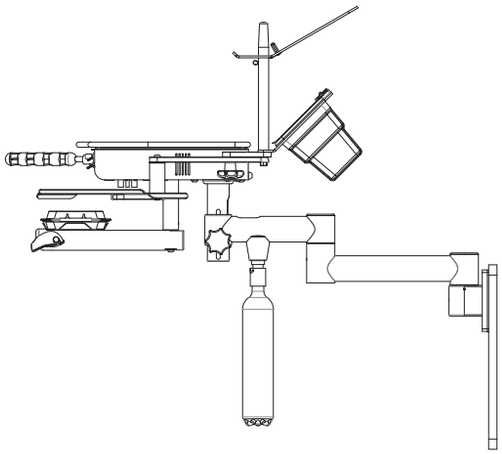

Model 7020PRO-MC
Mobile Cart Mount

Part Number 7020PRO-MC

Model 7020PRO-UC
Under Cabinet Floor Mount

Part Number 7020PRO-UC

Model 7020PRO-WM
Wall Mount

Part Number 7020PRO-WM

! Designer Friendly® Surface Treatments

STEP 1 SELECT POWDER COAT PAINT:

- ◯ Arctic Silver
- ◯ Bronze
- ◯ Charcoal
- ◯ Copper
- ◯ Forest Grey
- ◯ Midnight
- ◯ Pewter
- ◯ Shadow
- ◯ White

STEP 2 SOLID WORK SURFACE COLORS:

Corian®
- ◯ Antarctica

Wilsonart®:
- ◯ Arctic Melange
- ◯ Baja Melange

Meganite®:
- ◯ Cinder Granite
- ◯ Goldrush Gemstone
- ◯ Moonstone
- ◯ Platinum Granite
- ◯ Rocky Road Granite
- ◯ Silver Mist
- ◯ Starry Starry Night

Cabinet mounting configurations, see page 53

	Factory Options	Part No
	MONITOR MOUNT ASSEMBLY	**MODEL CHOICE** _____
	Factory Installed STAR ETorque Electric System	STAR-ETORQUE
	Handpiece illumination system	
	One handpiece (5-hole), accommodates 1 add'l tubing	1700-021-CS
	Add'l handpiece illumination tubing (5-hole)	0017-615-CS
	One handpiece (6-pin), accommodates 1 add'l tubing	1700-019-CS
	Add'l handpiece illumination tubing (6-pin)	0017-603-CS
!	Ancillaries use existing handpiece position (tubing lengths may vary) (see page 71)	
	Write in selection here _____	
	Write in selection here _____	
!	Handpiece Bundle option (see pages 68-69)	
	Write in selection here _____	
	Additional handpiece position, wet	1100-189-CS
	Additional handpiece position, air drive only	1100-190-CS
	Additional standard autoclavable HVE with tubing, 5' & autoclavable oral dry cup	1400-113-CS
	Hands-Free HVE, see page 91, Write in selection here _____	
	Quick disconnect with flow control 1/4" (for water)	0016-454-CS
	Quick disconnect with flow control 3/8" (for air)	0016-456-CS
!	Monitor mount assembly (monitor screen not included)	1300-025-CS
!	Swivel tray	1110-909-CS
	Large bin divider kit (white or black)	0010-860 / 0010-860-BLK
	Small bin divider kit (white or black)	0010-861 / 0010-861-BLK
	Sharps container kit (white or black)	0010-870 / 0010-870-BLK
!	Touchpad for 3900 chair (25 ft. Cable)	1700-081-1-CS
	Standard utility center housing & cover (BC/UC/WM)	1115-020
	In floor recessed utility center housing & cover	1115-305
	Additional umbilical (per foot)	1115-999-CS
	Routing valve kit with water shutoff & regulator/factory installation	1115-315-CS
	Universal mounting plate, 10" x 24" in lieu of 11" x 141/2" (BC)	0010-084-CS
Δ	Special color solid work surface (call for price and leadtime)	0023-856-SSV

! Often overlooked

Δ Lead time varies

Forest Packages
Chairs and Stools
Lights and Monitor Mounts
7000 Series
Delivery Systems
Simplified
Factory Options and Parts
General Information
Equipment Warranty
Radiance Operatory
Imagine + Operatory
Operatory Mobile
Sterilization Centers
Orthodontic Cabinetry
Reception/Front Desk Cabinetry
Color Options
Cabinet Warranty
Compressors
Dry Vacuums
Tanks
Wet Vacuums
Utility Room Accessories
Utility Warranty

7021PRO Duo Swing Delivery System

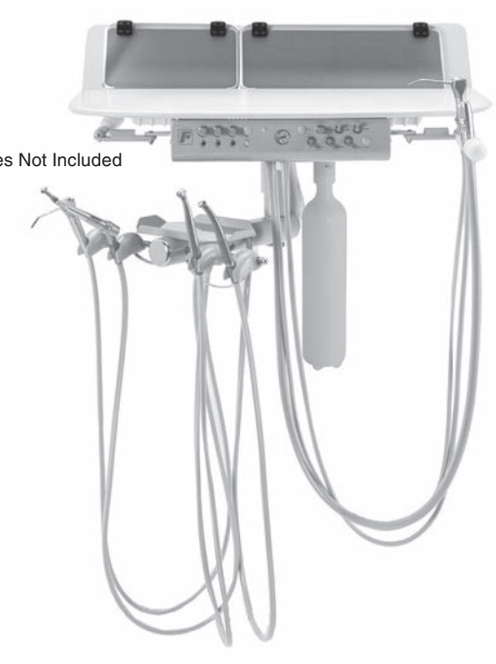

Handpieces Not Included

7021PRO

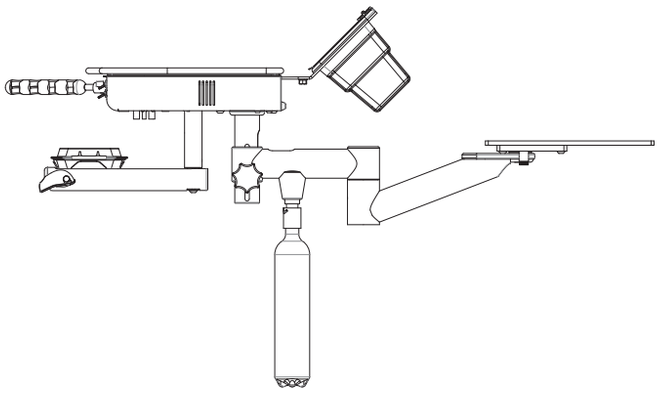

Model 7021PRO-BC

Beneath Counter Mount

Part Number 7021PRO-BC

Universal heavy-duty mounting plate 11” x 14 1/2” included (mounts to under counter)
Specify Cabinet Manufacturer

Standard Features

Duo Delivery System 7021PRO

Duo control
- automatic control for three handpieces
- handpiece lockouts
- 3-way air water syringe w/tubing, 5’
- 4-hole handpiece tubing, 5’
- pneumatic master control block w/diaphragm
- master on/off
- individual handpiece pressure adjustment
- individual water coolant adjustment
- non-retraction water coolant
- air coolant adjustment
- handpiece flush
- handpiece exhaust canister/oil collector
- wet/dry foot control

Self-contained clean water system w/quick disconnect, single bottle, 1 1/2 liter
“Burr Buddy” tray holder and covered Zirc tray
Chrome accents
Central vacuum accessory package
- central vacuum canister with disposable solids collector
- 3-way air/water syringe w/tubing, 5’
- autoclavable standard HVE lever valve w/tubing, 5’
- autoclavable saliva ejector lever valve w/tubing, 5’
- dual assistant’s quad holder assembly

Solid work surface, 17” x 30”
Pneumatic work surface easy lift/close mechanism
Height adjustable work surface, 5”
Large and small organizer bins w/frame, dividers and sharps container
Universal heavy duty mounting plate 11” x 14 1/2”, beneath counter (BC)
Wall mount panel 16” x 18” (WM)
Standard utility center housing and cover (MC)
Air pressure regulator w/filter
Master air shut-off valve
Umbilical, 6’

Beneath Counter Mount

Mobile Cart

Under Cabinet Floor Mount

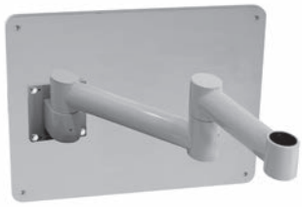

Wall Mount

Mounting plate dimensions, see pages 96-105
Shipping weight estimate:
7021PRO BC, MC, UC, WM 100 lb / 46 kg

Forest Packages
Chairs and Stools
Lights and Monitor Mounts
7000 Series
Delivery Systems
Simplified
Factory Options and Parts
General Information
Equipment Warranty
Radiance Operatory
Imagine + Operatory
Operatory Mobile
Sterilization Centers
Orthodontic Cabinetry
Reception/Front Desk Cabinetry
Color Options
Cabinet Warranty
Compressors
Dry Vacuums
Tanks
Wet Vacuums
Utility Room Accessories
Utility Warranty

7021PRO Duo Swing Delivery System

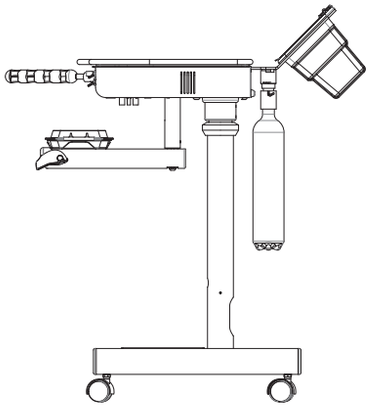

Model 7021PRO-MC
Mobile Cart Mount

Part Number 7021PRO-MC

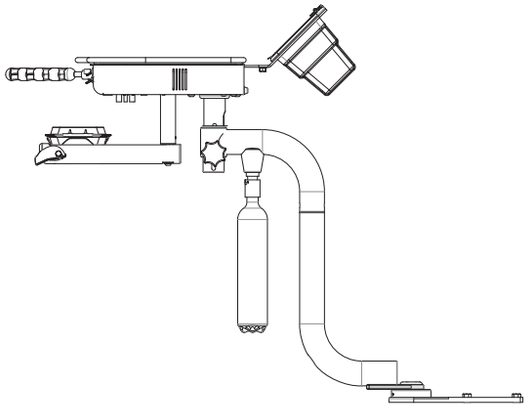

Model 7021PRO-UC
Under Cabinet Floor Mount

Part Number 7021PRO-UC

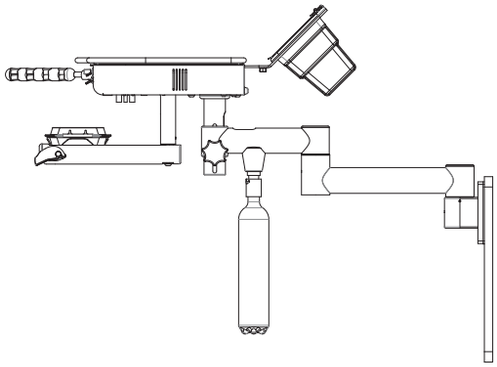

Model 7021PRO-WM
Wall Mount

Part Number 7021PRO-WM

! **Designer Friendly® Surface Treatments**

STEP 1 SELECT POWDER COAT PAINT:

- ◯ Arctic Silver
- ◯ Bronze
- ◯ Charcoal
- ◯ Copper
- ◯ Forest Grey
- ◯ Midnight
- ◯ Pewter
- ◯ Shadow
- ◯ White

STEP 2 SOLID WORK SURFACE COLORS:

Corian®
- ◯ Antarctica

Wilsonart®:
- ◯ Arctic Melange
- ◯ Baja Melange

Meganite®:
- ◯ Cinder Granite
- ◯ Goldrush Gemstone
- ◯ Moonstone
- ◯ Platinum Granite
- ◯ Rocky Road Granite
- ◯ Silver Mist
- ◯ Starry Starry Night

Cabinet mounting configurations, see page 53

	Factory Options	Part No
	DELIVERY SYSTEM	**MODEL CHOICE** _____
	Factory Installed STAR ETorque Electric System	STAR-ETORQUE
	Handpiece illumination system	
	One handpiece (5-hole), accommodates 1 add'l tubing	1700-021-CS
	Add'l handpiece illumination tubing (5-hole)	0017-615-CS
	One handpiece (6-pin), accommodates 1 add'l tubing	1700-019-CS
	Add'l handpiece illumination tubing (6-pin)	0017-603-CS
!	Ancillaries use existing handpiece position (tubing lengths may vary) (see page 71)	
	Write in selection here _____	
	Write in selection here _____	
!	Handpiece Bundle option (see pages 68-69)	
	Write in selection here _____	
	Additional handpiece position, wet	1100-189-CS
	Additional handpiece position, air drive only	1100-190-CS
	Additional standard autoclavable HVE with tubing, 5' & autoclavable oral dry cup	1400-113-CS
	Hands-Free HVE, see page 91, Write in selection here _____	
	Quick disconnect with flow control 1/4" (for water)	0016-454-CS
	Quick disconnect with flow control 3/8" (for air)	0016-456-CS
!	Procedure shelf	0010-864-CS
!	Keyboard tray	0010-862-CS
!	Stainless trash/CPU tray, H-frame (MC)	0010-863
!	Monitor mount assembly (monitor screen not included) base model requires purchase of 0010-864-CS	1300-025-CS
!	Swivel tray	1110-909-CS
	Large bin divider kit (white or black)	0010-860 / 0010-860-BLK
	Small bin divider kit (white or black)	0010-861 / 0010-861-BLK
	Sharps container kit (white or black)	0010-870 / 0010-870-BLK
!	Touchpad for 3900 chair (25 ft. Cable)	1700-081-1-CS
	Standard utility center housing & cover (BC/UC/WM)	1115-020
	In floor recessed utility center housing & cover	1115-305
	Additional umbilical (per foot)	1115-999-CS
	Routing valve kit with water shutoff & regulator/factory installation	1115-315-CS
	Universal mounting plate, 10" x 24" in lieu of 11" x 141/2" (BC)	0010-084-CS
Δ	Special color solid work surface (call for price and leadtime)	0023-856-SSV

! Often overlooked

Δ Lead time varies

Forest Packages
Chairs and Stools
Lights and Monitor Mounts
7000 Series
Delivery Systems
Simplified
Factory Options and Parts
General Information
Equipment Warranty
Radiance Operatory
Imagine + Operatory
Operatory Mobile
Sterilization Centers
Orthodontic Cabinetry
Reception/Front Desk Cabinetry
Color Options
Cabinet Warranty
Compressors
Dry Vacuums
Tanks
Wet Vacuums
Utility Room Accessories
Utility Warranty

7010 Duo Swing Delivery System

1110-185-CS and 1110-908-CS
Shown with optional storage organizer and swivel tray

Shown with optional handpiece lockouts 0010-748 and additional assistant's quad holder assembly 0024-156

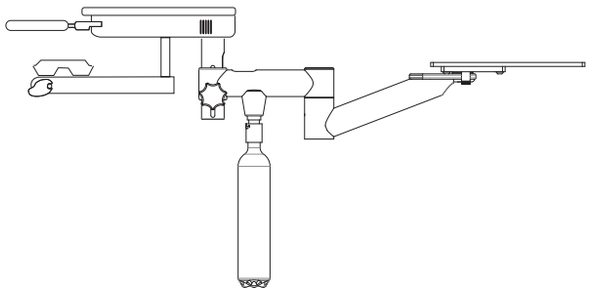

Model 7010BC
Beneath Counter Mount

Part Number 7010BC

Universal heavy-duty mounting plate 11" x 14 1/2" included (mounts to under counter)
Specify Cabinet Manufacturer

Standard Features

Duo Swing Delivery System 7010

Duo control
- automatic control for three handpieces
- 3-way air water syringe w/tubing, 4'
- 4-hole handpiece tubing, 4'
- pneumatic master control block w/diaphragm
- master on/off
- individual handpiece pressure adjustment
- individual water coolant adjustment
- non-retraction water coolant
- air coolant adjustment
- handpiece flush
- handpiece exhaust canister/oil collector
- self-contained clean water system w/quick disconnect, single bottle, 1 1/2 liter
- wet/dry foot control

Height adjustable work surface, 5" (BC/UC/WM)
"Burr Buddy" tray holder and covered Zirc tray
Pneumatic work surface easy lift/close mechanism
Central vacuum accessory package
- central vacuum canister w/disposable solids collector
- 3-way air/water syringe w/tubing, 5'
- autoclavable standard HVE lever valve w/tubing, 5'
- autoclavable saliva ejector lever valve w/tubing, 5'

Solid work surface, 19" x 24"
Universal heavy duty mounting plate
- 11" x 14 1/2", beneath counter (BC)

Wall mount panel 16" x 18" (WM)
Adjustable height frame (MC)
Twin wheel hard floor casters (MC)
Standard utility center housing and cover (MC)
Air pressure regulator w/filter
Master air shut-off valve
Umbilical, 7'
External umbilical, 6' (MC)

Beneath Counter Mount

Mobile Cart

Under Cabinet Floor Mount

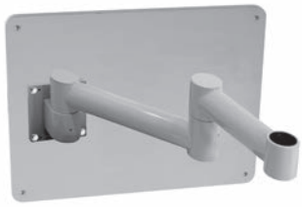

Wall Mount

Mounting plate dimensions, see pages 102-105
Shipping weight estimate:
7010BC, MC, UC, WM 130 lb / 59 kg

Forest Packages
Chairs and Stools
Lights and Monitor Mounts
7000 Series
Delivery Systems
Simplified
Factory Options and Parts
General Information
Equipment Warranty
Radiance Operatory
Imagine + Operatory
Operatory Mobile
Sterilization Centers
Orthodontic Cabinetry
Reception/Front Desk Cabinetry
Color Options
Cabinet Warranty
Compressors
Dry Vacuums
Tanks
Wet Vacuums
Utility Room Accessories
Utility Warranty

7010 Duo Swing Delivery System

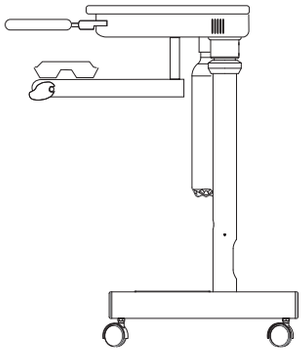

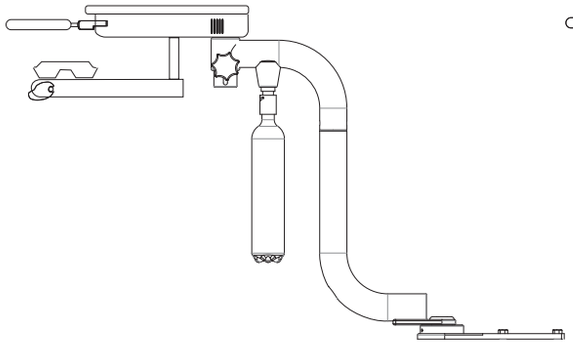

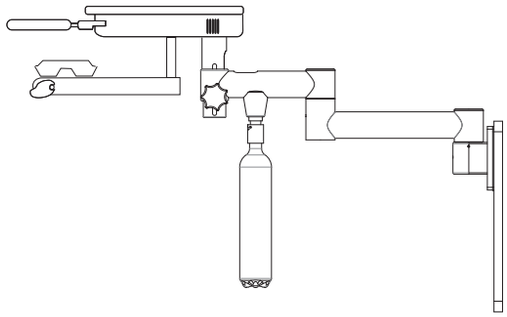

Model 7010MC
Mobile Cart Mount

Part Number 7010MC

Model 7010UC
Under Cabinet Floor Mount

Part Number 7010UC

Model 7010WM
Wall Mount

Part Number 7010WM

! Designer Friendly® Surface Treatments

STEP 1 SELECT POWDER COAT PAINT:

- ◯ Arctic Silver
- ◯ Bronze
- ◯ Charcoal
- ◯ Copper
- ◯ Forest Grey
- ◯ Midnight
- ◯ Pewter
- ◯ Shadow
- ◯ White

STEP 2 SOLID WORK SURFACE COLORS:

Corian®
- ◯ Antarctica

Wilsonart®:
- ◯ Arctic Melange
- ◯ Baja Melange

Meganite®:
- ◯ Cinder Granite
- ◯ Goldrush Gemstone
- ◯ Moonstone
- ◯ Platinum Granite
- ◯ Rocky Road Granite
- ◯ Silver Mist
- ◯ Starry Starry Night

Cabinet mounting configurations, see page 53

	Factory Options	Part No
	DELIVERY SYSTEM	**MODEL CHOICE** _____
	Factory Installed STAR ETorque Electric System	STAR-ETORQUE
	Handpiece illumination system	
	One handpiece (5-hole), accommodates 1 add'l tubing	1700-021-CS
	Add'l handpiece illumination tubing (5-hole)	0017-615-CS
	One handpiece (6-pin), accommodates 1 add'l tubing	1700-019-CS
	Add'l handpiece illumination tubing (6-pin)	0017-603-CS
!	Ancillaries use existing handpiece position (tubing lengths may vary) (see page 71)	
	Write in selection here _____	
	Write in selection here _____	
!	Handpiece Bundle option (see pages 68-69)	
	Write in selection here _____	
	Additional handpiece position, wet	1100-189-CS
	Additional handpiece position, air drive only	1100-190-CS
	Lockout feature for 3 handpieces	0010-748
	Additional standard autoclavable HVE with tubing, 5' & autoclavable oral dry cup	1400-113-CS
	Hands-Free HVE, see page 91, Write in selection here _____	
	Additional assistant's quad holder assembly	0024-156
	Quick disconnect with flow control 1/4" (for water)	0016-454-CS
	Quick disconnect with flow control 3/8" (for air)	0016-456-CS
!	Storage organizer with bins & frame	1110-185-CS
!	Swivel tray (requires purchase of 1110-185-CS)	1110-908-CS
!	Swivel tray (mounts without storage organizer)	1110-079-CS
	Monitor mount assembly (monitor screen not included) base model requires purchase of 0010-864-CS	1300-025-CS
	Swivel tray	1110-909-CS
	Touchpad for 3900 chair (25 ft. Cable)	1700-081-1-CS
	Chrome accents	9000-998-CS
	Standard utility center housing & cover (BC/UC/WM)	1115-020
	In floor recessed utility center housing & cover	1115-305
	Additional umbilical (per foot)	1115-999-CS
	Routing valve kit with water shutoff & regulator/factory installation	1115-315-CS
	Universal mounting plate, 10" x 24" in lieu of 11" x 14 1/2" (BC)	0010-084-CS
	Standard color laminate work surface in lieu of solid surface	0023-776-LAM
Δ	Special color solid or laminate work surface (call for price and leadtime)	0023-776-SSV/ 0023-776-X

! Often overlooked

Δ Lead time varies

Forest Packages
Chairs and Stools
Lights and Monitor Mounts
7000 Series
Delivery Systems
Simplified
Factory Options and Parts
General Information
Equipment Warranty
Radiance Operatory
Imagine + Operatory
Operatory Mobile
Sterilization Centers
Orthodontic Cabinetry
Reception/Front Desk Cabinetry
Color Options
Cabinet Warranty
Compressors
Dry Vacuums
Tanks
Wet Vacuums
Utility Room Accessories
Utility Warranty

3486 Swing Delivery System

1110-179-CS and 1110-908-CS
Shown with optional storage organizer
and swivel tray

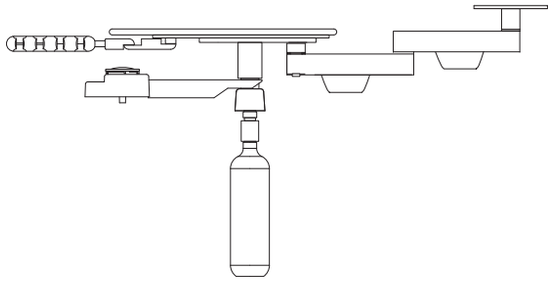

Model 3486BC
Beneath Counter Mount

Part Number 3486BC

Universal heavy-duty mounting plate 11” x 14 1/2”
included (mounts to under counter)
Specify Cabinet Manufacturer

Standard Features

Assistant’s Swing Delivery System 3486 Series
Central vacuum accessory package
- arm-mounted central vacuum canister
  - w/disposable solids collector
- 3-way air/water syringe w/tubing, 5’
- autoclavable standard HVE lever valve w/tubing, 5’
- autoclavable saliva ejector lever valve w/tubing, 5’
- self-contained clean water system w/quick disconnect, single bottle, 1 1/2 liter

Assistant’s quad holder assembly
Solid work surface, 19” x 24”
Beneath counter rigid arm assembly
- w/heavy duty mounting plate, 11” x 14 1/2” (BC)

Adjustable height frame (MC)
Twin wheel hard floor casters (MC)
Under cabinet floor mount delivery post (UC)
Wall mount panel, 16” x 18” (WM)
Standard utility center housing and cover (MC)
Air pressure regulator w/filter
Master shut-off valve
Umbilical, 7’
- electrical outlet/UL (MC)

Note: Arms can be reversed on the beneath counter and wall mount to adjust work surface height.

Beneath Counter Mount

Mobile Cart

Under Cabinet Floor Mount

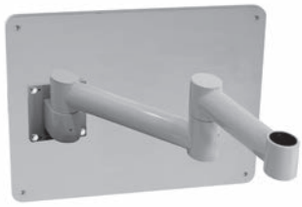

Wall Mount

Mounting plate dimensions, see pages 107-108
Shipping weight estimate:
3486 115 lb / 53 kg

Forest Packages
Chairs and Stools
Lights and Monitor Mounts
7000 Series
Delivery Systems
Simplified
Factory Options and Parts
General Information
Equipment Warranty
Radiance Operatory
Imagine + Operatory
Operatory Mobile
Sterilization Centers
Orthodontic Cabinetry
Reception/Front Desk Cabinetry
Color Options
Cabinet Warranty
Compressors
Dry Vacuums
Tanks
Wet Vacuums
Utility Room Accessories
Utility Warranty

3486 Swing Delivery System

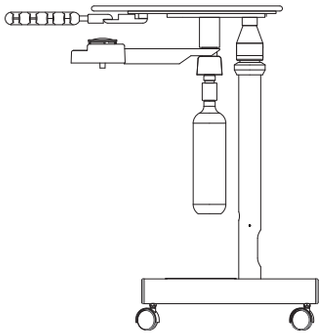

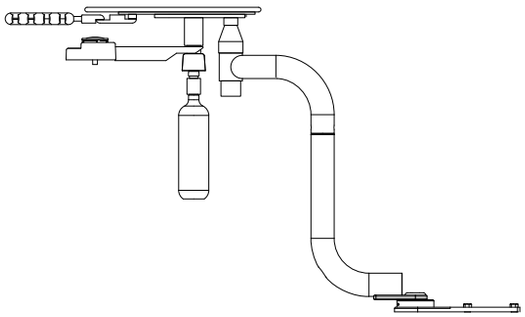

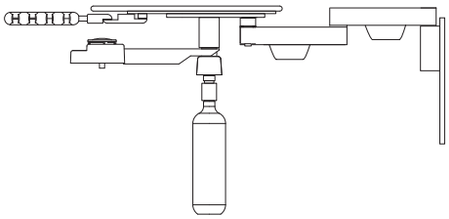

Model 3486MC
Mobile Cart Mount

Part Number 3486MC

Model 3486UC
Under Cabinet Floor Mount

Part Number 3486UC

Model 3486WM
Wall Mount

Part Number 3486WM

! Designer Friendly® Surface Treatments

STEP 1 SELECT POWDER COAT PAINT:

- ◯ Arctic Silver
- ◯ Bronze
- ◯ Charcoal
- ◯ Copper
- ◯ Forest Grey
- ◯ Midnight
- ◯ Pewter
- ◯ Shadow
- ◯ White

STEP 2 SELECT UNIT PLASTIC FINISHES:

- ◯ Forest Grey
- ◯ Greywood
- ◯ Laser Leather
- ◯ Lemans
- ◯ White

STEP 3 SOLID WORK SURFACE COLORS:

Corian®
- ◯ Antarctica

Wilsonart®:
- ◯ Arctic Melange
- ◯ Baja Melange

Meganite®:
- ◯ Cinder Granite
- ◯ Goldrush Gemstone
- ◯ Moonstone
- ◯ Platinum Granite
- ◯ Rocky Road Granite
- ◯ Silver Mist
- ◯ Starry Starry Night

	Factory Options	Part No
	DELIVERY SYSTEM **MODEL CHOICE**	_____
	Additional standard autoclavable HVE with tubing, 5' & autoclavable oral dry cup	1400-113-CS
	Hands-Free HVE, see page 91, Write in selection here	_____
	Additional assistant's quad holder assembly	0024-149
	Quick disconnect with flow control 1/4" (for water)	0016-454-CS
	Quick disconnect with flow control 3/8" (for air)	0016-456-CS
!	Storage organizer with bins & frame	1110-179-CS
!	Swivel tray (requires purchase of 1110-179-CS)	1110-908-CS
!	Swivel tray (mounts without storage organizer)	1110-482-CS
	Monitor mount assembly (monitor screen not included) requires purchase of 1110-179-CS	1300-025-CS
	Touchpad for 3900 chair (25 ft. Cable)	1700-081-1-CS
	Standard utility center housing & cover (BC/UC/WM)	1115-020
	In floor recessed utility center housing & cover	1115-305
	Additional umbilical (per foot)	1115-999-CS
	Routing valve kit with water shutoff & regulator/factory installation	1115-315-CS
	Standard color laminate work surface in lieu of solid surface	0023-003-LAM
Δ	Special color solid or laminate work surface (call for price and leadtime)	0023-003-X/ 0023-003-SSV

! Often overlooked

Δ Lead time varies

Cabinet mounting configurations, see page 53

Forest Packages
Chairs and Stools
Lights and Monitor Mounts
7000 Series
Delivery Systems
Simplified
Factory Options and Parts
General Information
Equipment Warranty
Radiance Operatory
Imagine + Operatory
Operatory Mobile
Sterilization Centers
Orthodontic Cabinetry
Reception/Front Desk Cabinetry
Color Options
Cabinet Warranty
Compressors
Dry Vacuums
Tanks
Wet Vacuums
Utility Room Accessories
Utility Warranty

Storage Organizer, Trays and Monitor Mount

Storage Organizer with Bins and Frame

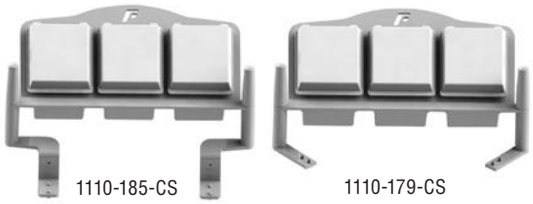

Factory option model: 7010 — 1110-185-CS
Factory option models: 2184BC/2186BC/3486 — 1110-179-CS

- Metal powder coated organizer frame
- Three storage bins with removable covers
- Storage dividers

Swivel Tray

Factory option models: — 1110-908-CS
2184BC/2186BC/3486/7010 requires purchase of 1110-179-CS or 1110-185-CS

- Inserts inside storage organizer tower
- Metal powder coated tray holder
- Plastic instrument tray

Swivel Tray with Left or Right Mounting Bracket

Factory option model: 7010 — 1110-079-CS
Factory option models: 2184BC/2186BC/3486 — 1110-482-CS

- Metal powder coated organizer frame
- Three storage bins with removable covers
- Storage dividers

Swivel Tray with Left and Right Mounting Brackets

Factory option models: — 1110-909-CS

- Metal powder coated tray holder towers and brackets
- Plastic instrument tray

PRO Series and 7010 third tray addition mounts with organizer

Monitor Mount

Factory option models: — 1300-025-CS

- Inserts inside storage organizer or PRO Series procedure shelf tower
- Forest's unique locking tilt mechanism with knob 1/2" pin

PRO Series 7021 requires purchase of 0010-864-CS
7010 requires purchase of 1110-185-CS
2184BC/2186BC/3486 requires purchase of 1110-179-CS

Monitor requirements (not included):
12 volt with power supply
Weight 8-1/4 to 13 lbs. max, width of 19"

Forest Packages
Chairs and Stools
Lights and Monitor Mounts
7000 Series
Delivery Systems
Simplified
Factory Options and Parts
General Information
Equipment Warranty
Radiance Operatory
Imagine + Operatory
Operatory Mobile
Sterilization Centers
Orthodontic Cabinetry
Reception/Front Desk Cabinetry
Color Options
Cabinet Warranty
Compressors
Dry Vacuums
Tanks
Wet Vacuums
Utility Room Accessories
Utility Warranty

Forest
DELIVERY SYSTEMS

Forest Packages
Chairs and Stools
Lights and Monitor Mounts
7000 Series
Delivery Systems
Simplified
Factory Options and Parts
General Information
Equipment Warranty
Radiance Operatory
Imagine + Operatory
Operatory Mobile
Sterilization Centers
Orthodontic Cabinetry
Reception/Front Desk Cabinetry
Color Options
Cabinet Warranty
Compressors
Dry Vacuums
Tanks
Wet Vacuums
Utility Room Accessories
Utility Warranty

STANDARD IC

Material: aluminum hinged lid 1/8” ABS plastic chassis with durable DR acrylic protective coating
Benefit: hinge allows quick access to controls and ancillary devices / lid and chassis are resistant to UV, impact and compatible surface cleaners / aluminum lid is strong and lightweight

Material: electro-less nickel plated brass air and water Ts, routing valves, pneumatic control and distribution blocks
Benefit: 20 year limited warranty on all parts “under the hood” (on all control heads); refer to page 107 for warranty details
trouble-free handpiece operation

Material: handpiece holder bar with glass-filled nylon injection molded handpiece holders
Benefit: allows for up to four handpiece positions, a syringe and ancillary touchpad at your desired angle and spacing

Material: hinged aluminum control head lid
Benefit: available in nine two-coat powder coat paint colors

Material: plastic chassis
Benefit: available in three carbon fiber look and two solid color finishes

EURO

Material: whip arms rotate on nylon wheels with aluminum and brass components
Benefit: feather-touch whip movement / ultralight handpiece feel / long, trouble free life

Material: control head swivels at its center point
Benefit: 240-degrees of control head rotation allows for beside-or over- the-patient placement

Material: forward mounted aluminum whip arm system
Benefit: allows for greater reach of handpiece and syringe expanding control head placement options.

Material: plastic control head lid
Benefit: available in three carbon fiber looks and two solid color finishes

Feature: autoclavable silicone handpiece pad available in black and white
Benefit: blends with Designer Friendly® choices

Forest Packages
Chairs and Stools
Lights and Monitor Mounts
7000 Series
Delivery Systems
Simplified
Factory Options and Parts
General Information
Equipment Warranty
Radiance Operatory
Imagine + Operatory
Operatory Mobile
Sterilization Centers
Orthodontic Cabinetry
Reception/Front Desk Cabinetry
Color Options
Cabinet Warranty
Compressors
Dry Vacuums
Tanks
Wet Vacuums
Utility Room Accessories
Utility Warranty

Standard IC Delivery Unit

Standard IC

Please use graph below to determine number of ancillaries and options possible for the Standard IC.

Standard Features

Automatic control for three handpieces
- 3-way air/water syringe with tubing, 5'
- 4-hole handpiece tubing, 5',
- pneumatic master control block with diaphragm master on/off
- individual handpiece pressure adjustment
- individual water coolant adjustment
- non-retraction water coolant
- air/water coolant adjustment
- handpiece flush
- handpiece exhaust canister/oil collector
- handle brake release function

% Standard IC Control Head Space Absorbed per Option

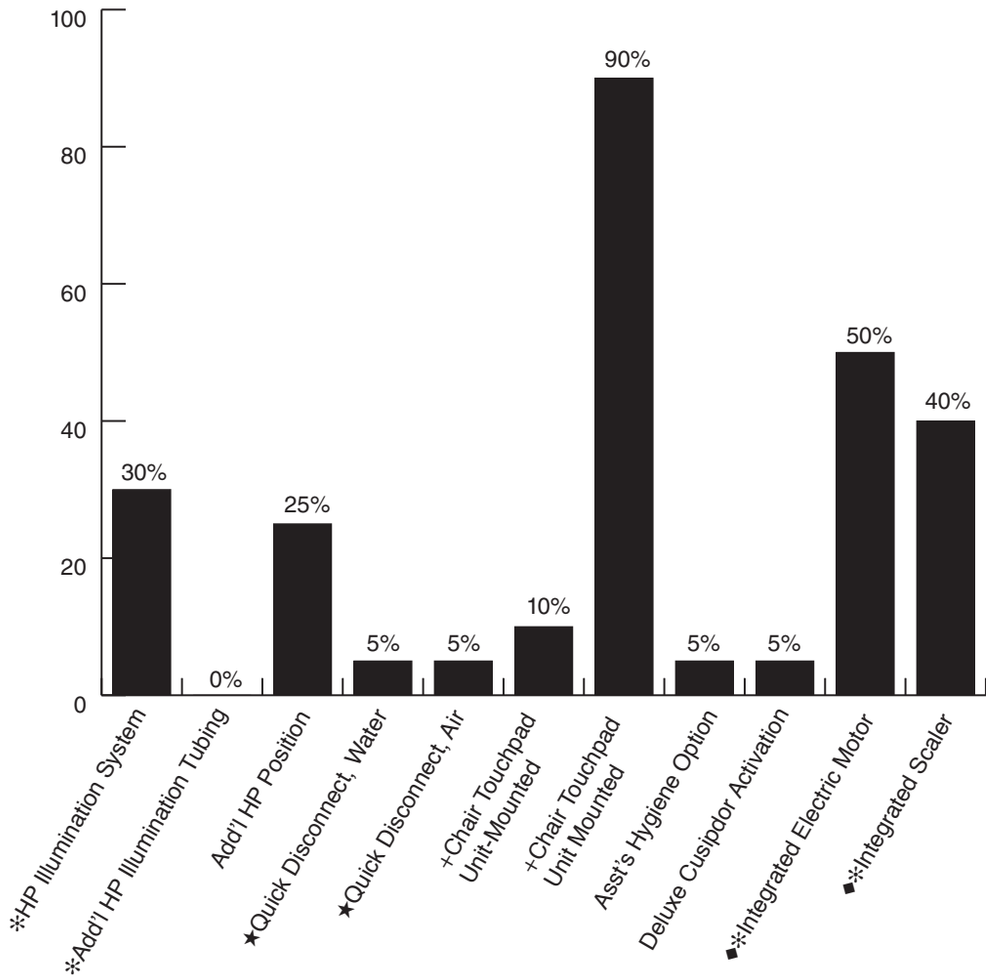

Please note:
If your ancillary and option choices exceed 100%, please call customer service for additional information.

✻ Uses existing handpiece position
★ Standard on SE and SI deliveries
+ 3900 Chair touchpad cable standard on PI and SI deliveries
◆ Two or more may require purchase of 0010-310 ancillary shelf (see page 72)

Forest Packages
Chairs and Stools
Lights and Monitor Mounts
7000 Series
Delivery Systems
Simplified
Factory Options and Parts
General Information
Equipment Warranty
Radiance Operatory
Imagine + Operatory
Operatory Mobile
Sterilization Centers
Orthodontic Cabinetry
Reception/Front Desk Cabinetry
Color Options
Cabinet Warranty
Compressors
Dry Vacuums
Tanks
Wet Vacuums
Utility Room Accessories
Utility Warranty

Euro Delivery Unit

Euro

Please use graph below to determine number of ancillaries and options possible for the Euro.

Standard Features

Automatic control for four handpieces
- 3-way air/water syringe with tubing, 3'
- 4-hole handpiece tubing, 3'
- pneumatic master control block with diaphragm
- master on/off
- individual handpiece pressure adjustment
- individual water coolant adjustment
- non-retraction water coolant
- air/water coolant adjustment
- handpiece flush
- handpiece exhaust canister/oil collector
- dual handle brake release function
- swivel instrument tray

% Euro Control Head Space Absorbed per Option

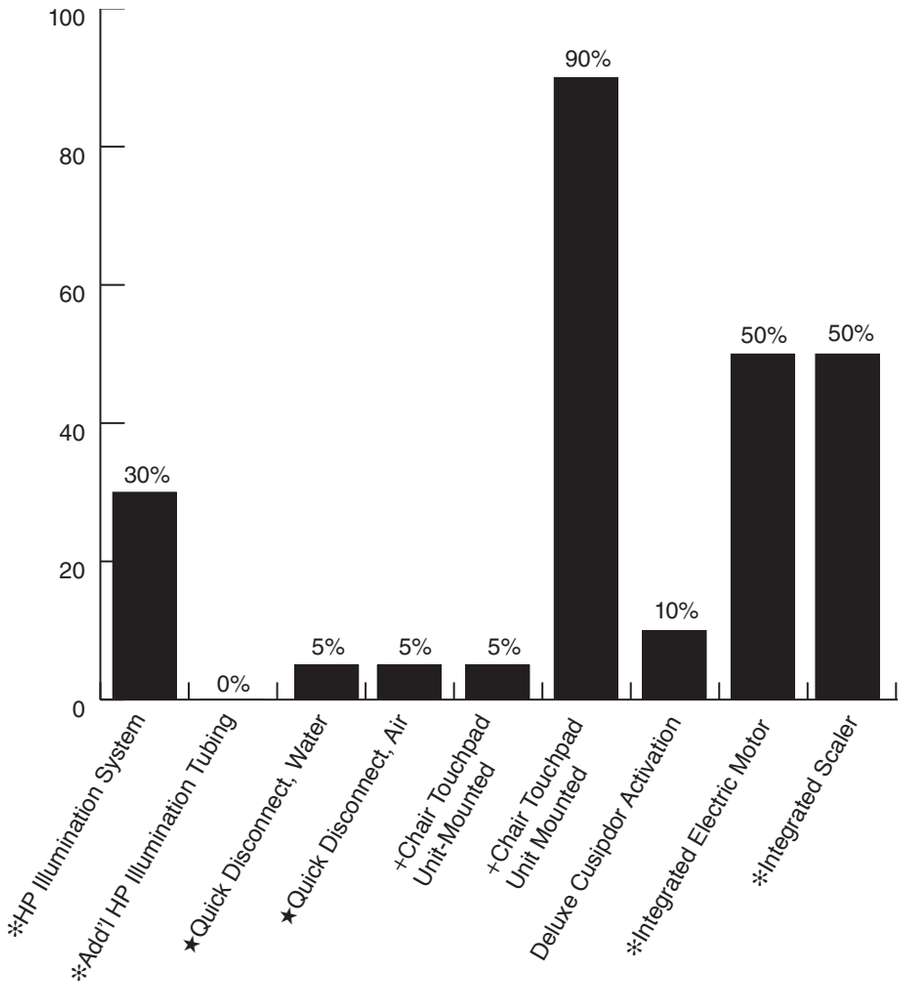

Please note:
If your ancillary and option choices exceed 100%, please call customer service for additional information.

❊ Uses existing handpiece position
★ Standard on SE and SI deliveries
+ 3900 Chair touchpad cable standard on PI and SI deliveries

Forest Packages
Chairs and Stools
Lights and Monitor Mounts
7000 Series
Delivery Systems
Simplified
Factory Options and Parts
General Information
Equipment Warranty
Radiance Operatory
Imagine + Operatory
Operatory Mobile
Sterilization Centers
Orthodontic Cabinetry
Reception/Front Desk Cabinetry
Color Options
Cabinet Warranty
Compressors
Dry Vacuums
Tanks
Wet Vacuums
Utility Room Accessories
Utility Warranty

Fusion Delivery Unit

Fusion

Please use graph below to determine number of ancillaries and options possible for the delivery system.

Standard Features

Automatic control for three handpieces
- 3-way air/water syringe w/tubing, 5'
- 4-hole handpiece tubing, 5'
- pneumatic master control block w/diaphragm
- master on/off
- individual handpiece pressure adjustment
- individual water coolant adjustment
- non-retraction water coolant
- air coolant adjustment
- handpiece flush
- handpiece exhaust canister/oil collector
- handle brake release function

% Control Head Space Absorbed per Option

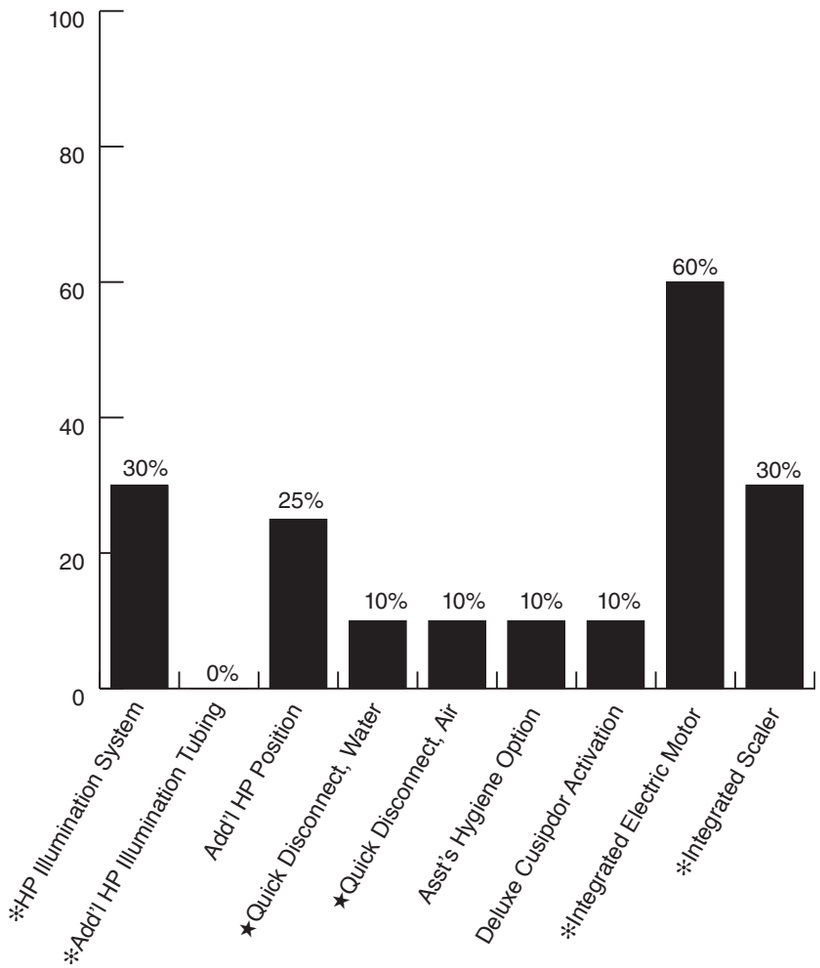

Please note:
If your ancillary and option choices exceed 100%, please call customer service for additional information.

❊ Uses existing handpiece position
★ Standard on SI deliveries

Forest Packages
Chairs and Stools
Lights and Monitor Mounts
7000 Series
Delivery Systems
Simplified
Factory Options and Parts
General Information
Equipment Warranty
Radiance Operatory
Imagine + Operatory
Operatory Mobile
Sterilization Centers
Orthodontic Cabinetry
Reception/Front Desk Cabinetry
Color Options
Cabinet Warranty
Compressors
Dry Vacuums
Tanks
Wet Vacuums
Utility Room Accessories
Utility Warranty

Save time and money with handpiece bundles
Our Star® handpiece bundles make it easy to be set up for success. Each bundle package is designed to complete a new operatory setup with easy ordering and tremendous savings.

Bundle Packages		Bundle Details	Part No	Quantity
Star 500 fiber optic Bundle		Star 500 Elite LubeFree, fiber optic	266040	3
Part Number	268925	Star 500 Swivel, fiber optic	266064	1
430 Torque fiber optic Bundle		430SWL Torque LubeFree, fiber optic	265890	3
Part Number	268927	LED Plug ‘N Play Swivel	265646	1
430 Series fiber optic Bundle		430SWL Satin LubeFree, fiber optic	268840	3
Part Number	268928	LED Plug ‘N Play Swivel	265646	1
430K Series fiber optic Bundle		430K LubeFree, fiber optic	262052	3
Part Number	268929			

Star fiber optic bundles require 6-pin tubing configuration and fiber optic light source
All other fiber optic bundles require fiber optic light source

NOTES:
Cannot be combined with other Star promotions or discounts.
*Savings calculated off the total retail price for the individual items in each package.

Forest Packages
Chairs and Stools
Lights and Monitor Mounts
7000 Series
Delivery Systems
Simplified
Factory Options and Parts
General Information
Equipment Warranty
Radiance Operatory
Imagine + Operatory
Operatory Mobile
Sterilization Centers
Orthodontic Cabinetry
Reception/Front Desk Cabinetry
Color Options
Cabinet Warranty
Compressors
Dry Vacuums
Tanks
Wet Vacuums
Utility Room Accessories
Utility Warranty

Bundle Packages		Bundle Details	Part No	Quantity
Star Titan® Low-Speed Bundle		Star Titan 20K Motor	266271	1
Part Number	268934	Titan 3 Motor To Angle Adaptor	264073	3
		Titan LubeFree Auto Latch Angle	264146	3
		Titan 3 Straight Nose Cone	257506	1
		Titan 4-Line Swivel	260144	1
Titan 3 Low-Speed Bundle		Titan 3 20K Motor	262262	1
Part Number	268930	Titan 3 Motor to Angle Adaptor	264073	3
		Titan LubeFree Auto Latch Angle	264146	3
		Titan 3 Straight Nose Cone	257506	1
		Titan 4-Line Swivel	260144	1
Star 500 non-fiber optic Bundle		Star 500 Elite LubeFree, non-fiber optic	266041	3
Part Number	268931	Star 500 Swivel, non-fiber optic	266065	1
430 Torque non-fiber optic Bundle		430SW Torque LubeFree	265891	3
Part Number	268932	LED Plug ‘N Play Swivel	265646	1
430 Series non-fiber optic Bundle		430SW Satin LubeFree	268841	3
Part Number	268933	LED Plug ‘N Play Swivel	265646	1

Star fiber optic bundles require 6-pin tubing configuration and fiber optic light source
All other fiber optic bundles require fiber optic light source

NOTES:
Cannot be combined with other Star promotions or discounts.
*Savings calculated off the total retail price for the individual items in each package.

Forest Packages
Chairs and Stools
Lights and Monitor Mounts
7000 Series
Delivery Systems
Simplified
Factory Options and Parts
General Information
Equipment Warranty
Radiance Operatory
Imagine + Operatory
Operatory Mobile
Sterilization Centers
Orthodontic Cabinetry
Reception/Front Desk Cabinetry
Color Options
Cabinet Warranty
Compressors
Dry Vacuums
Tanks
Wet Vacuums
Utility Room Accessories
Utility Warranty

Ancillary Products

Star ETorque™ Electric System

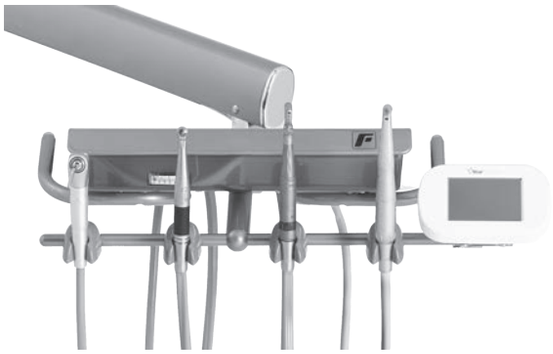

Factory Option	STAR-ETORQUE

Quiet and powerful, with a brushless motor reaching up to 200,000 rpm, this electric system can perform all procedures. It has a user-friendly display module that can be customized as needed and has a fully autoclavable motor. Handpiece attachments not included in price.

To order StarETorque and accessories, see the Star handpiece catalog.

Star® Titan® Blis-sonic™ Scaler

Blis-sonic SW

Blis-sonic K

To order Titan Blis-sonic scalers and accessories, see the Star handpiece catalog.

Blis-sonic SW Scaler (Includes 4 line swivel, Star PN 261547)	STAR-BLIS-SW
Blis-sonic K Scaler (Fixed Backed)	STAR-BLIS-K

Universal scaler tip
- Use for all Surfaces, medium and heavy calculus

Sickle scaler tip
- Recommended for sensitive patients
- Less energetic than the Universal Tip
- Less suitable for deep root scaling

Perio scaler tip
- Recommended for lingual supragingival scaling of mandibular incisors and deep local pockets
- Provides same energy as Universal Tip

Satelec SP

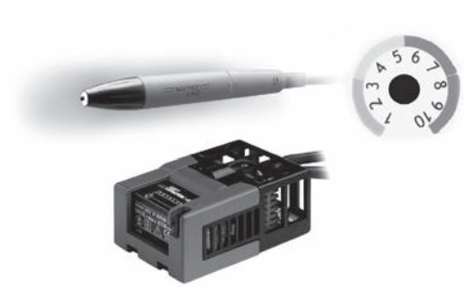

Factory option	SATELEC-S
Factory option	SATELEC-S-LED

- Uses existing handpiece position
- Satelec SP Newtron LED lit Piezo Ultrasonic Scaler w/power supply
- Color coding system ensures proper tip and power setting
- Three tips: #1, #10Z, H3 (Intro Scaling Kit)
- Tips available for periodontics, endodontics, scaling, restorative, and cavity preparation
- Cruise Control® automatically adjusts frequency amplitude
- On/off controlled by rheostat
- First ever autoclavable LED lit handpiece – 100,000 LUX
- Newtron technology means power, control and reliability
- Satelec warranty 1 year / tips 30 days from date of purchase
- Please call 800-289-6367 for warranty and technical support of the Scaler

Forest Packages
Chairs and Stools
Lights and Monitor Mounts
7000 Series
Delivery Systems
Simplified
Factory Options and Parts
General Information
Equipment Warranty
Radiance Operatory
Imagine + Operatory
Operatory Mobile
Sterilization Centers
Orthodontic Cabinetry
Reception/Front Desk Cabinetry
Color Options
Cabinet Warranty
Compressors
Dry Vacuums
Tanks
Wet Vacuums
Utility Room Accessories
Utility Warranty

Ancillary Products

Cavitron Scaler

Factory option CAVITRON

- Uses existing handpiece position Dentsply Cavitron Magnetostrictive Ultrasonic scaler
- Blue Zone® for patient comfort
- SPS® (Sustained Performance System)
  constant balance between scaling efficiency and patient comfort
- Handpiece w/330 degree swivel and lavage control (reduces cord drag)
- Autoclavable Steri-mate® (infection control)
- PowerLINE 1000 30K insert
- Frequency 30 kHz
- Cavitron warranty 2 years from date of purchase
- Please call 800-289-6367 for warranty and technical support of the Scaler

HP Illumination System, 5 Hole with NEW integrated LED bulb
HP Illumination System, 6 Pin

5 Hole 6 Pin

Factory option 1700-021-CS
Factory option 1700-019-CS

- Uses existing handpiece position
- Dual channel outputs individually adjustable from 2.5VDC to 4.0VDC
- Accommodates one additional handpiece tubing
- Illumination delay (adjustable between 0-15 seconds) can be set individually for 2 HP
- Automatic activation of HP illumination w/the dental unit foot control
- Simple installation into any new or existing dental unit
- Indicator LEDs confirms correct operation of the control module
- Powers all brands of optic handpieces and air-motors
- ISO standard handpiece terminal with stainless steel nut
- Handpiece tubing, (4' to 5' installed)
- Power transformer, output 24VAC, 1.05 Amps
- Installation hardware and instructions

HP Illumination Tubing, 5 Hole with NEW integrated LED bulb

Factory option 0017-615-CS

- Used to replace power optic handpiece tubing
- ISO standard power optic handpiece terminal with stainless steel nut
- Handpiece tubing, (4' to 5' factory installed)

HP Illumination Tubing, 6 Pin

Factory option 0017-603-CS

- Used to replace power optic handpiece tubing
- ISO standard power optic handpiece terminal with stainless steel adapter and nut
- Handpiece tubing, (4' to 5' factory installed)

Forest Packages
Chairs and Stools
Lights and Monitor Mounts
7000 Series
Delivery Systems
Simplified
Factory Options and Parts
General Information
Equipment Warranty
Radiance Operatory
Imagine + Operatory
Operatory Mobile
Sterilization Centers
Orthodontic Cabinetry
Reception/Front Desk Cabinetry
Color Options
Cabinet Warranty
Compressors
Dry Vacuums
Tanks
Wet Vacuums
Utility Room Accessories
Utility Warranty

Ancillary Products

Chair Control, Touchpad, Unit-Mounted

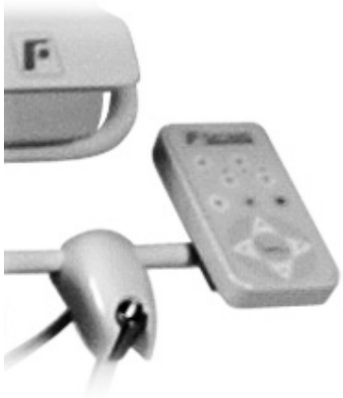

Factory option 3914-998-CS

- 4 programmable preset positions

Additional Chair Control, Touchpad, Unit-Mounted (3900/3800)

Factory option 3914-999-CS

Assistant's Hygiene Instrumentation

Factory option 1408-CS

- Canister with 1/2" drain
- Mounting bracket
- Drain tubing
- Autoclavable standard HVE w/tubing, 5'
- Autoclavable saliva ejector w/tubing, 5'
- Standard vacuum holder
- Universal holder
- Installed on Standard IC and Value control heads (not available on Euro)

Ancillary Shelf

Factory option 0010-310

- Accommodates additional ancillary products
- Designed for easy access to installed devices
- Powder coated aluminum
- Installed on Standard IC control head only

Forest Packages
Chairs and Stools
Lights and Monitor Mounts
7000 Series
Delivery Systems
Simplified
Factory Options and Parts
General Information
Equipment Warranty
Radiance Operatory
Imagine + Operatory
Operatory Mobile
Sterilization Centers
Orthodontic Cabinetry
Reception/Front Desk Cabinetry
Color Options
Cabinet Warranty
Compressors
Dry Vacuums
Tanks
Wet Vacuums
Utility Room Accessories
Utility Warranty

Forest
SIMPLIFIED

Forest Packages

Chairs and Stools

Lights and Monitor Mounts

7000 Series

Delivery Systems

Simplified

Factory Options and Parts

General Information

Equipment Warranty

Radiance Operatory

Imagine + Operatory

Operatory Mobile

Sterilization Centers

Orthodontic Cabinetry

Reception/Front Desk Cabinetry

Color Options

Cabinet Warranty

Compressors

Dry Vacuums

Tanks

Wet Vacuums

Utility Room Accessories

Utility Warranty

ORDERING EQUIPMENT MADE EASY

SIMPLIFIED

Too many options can sometimes be overwhelming. That's why this select product offering has just two color choices. That will make upgrading a treatment room or matching existing equipment easy.

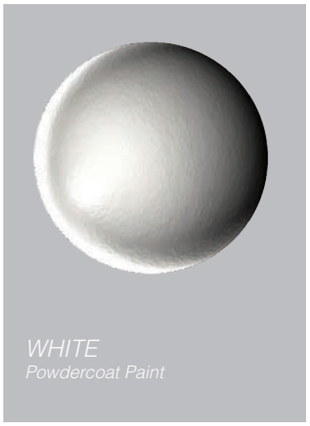

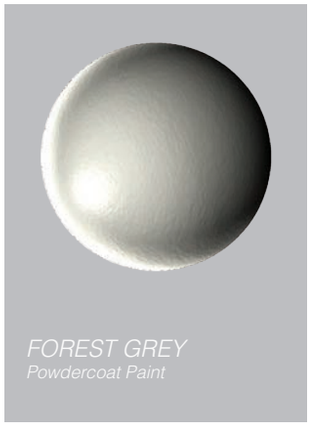

Forest Packages
Chairs and Stools
Lights and Monitor Mounts
7000 Series
Delivery Systems
Simplified
Factory Options and Parts
General Information
Equipment Warranty
Radiance Operatory
Imagine + Operatory
Operatory Mobile
Sterilization Centers
Orthodontic Cabinetry
Reception/Front Desk Cabinetry
Color Options
Cabinet Warranty
Compressors
Dry Vacuums
Tanks
Wet Vacuums
Utility Room Accessories
Utility Warranty

Ordering Forest Equipment Made Easy

Simplified

Too many options can sometimes be overwhelming. That's why this select product offering has just two color choices. You can make upgrading a treatment room or matching existing equipment easy.

Forest Packages
Chairs and Stools
Lights and Monitor Mounts
7000 Series
Delivery Systems
Simplified
Factory Options and Parts
General Information
Equipment Warranty
Radiance Operatory
Imagine + Operatory
Operatory Mobile
Sterilization Centers
Orthodontic Cabinetry
Reception/Front Desk Cabinetry
Color Options
Cabinet Warranty
Compressors
Dry Vacuums
Tanks
Wet Vacuums
Utility Room Accessories
Utility Warranty

Fixed Mount with Sidebox, External Umbilical

Choose Your Control Head

Fusion Control Head
Pnuematic 3 HP Syringe
Part Number 4295SE

Standard IC Control Head
Pnuematic 3 HP Syringe
Part Number 4485SE

Euro Control Head
Pnuematic 4 HP Syringe
Part Number 4987SE

Delivery Systems can be mounted on any 2" fixed post mount brand of chair

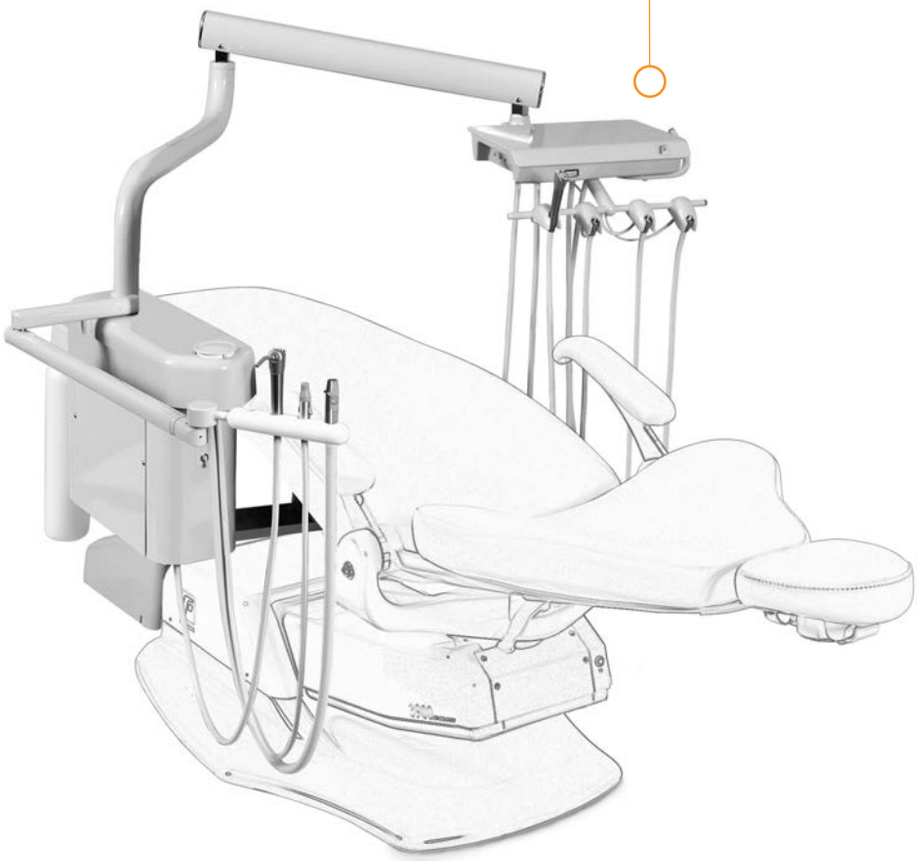

Optional Equipment Choose One:

○ **1577**
Cuspidor, Deluxe
(Sidebox comes with delivery)

○ **1679**
Cuspidor, Basic
(Sidebox comes with delivery)

○ **9083**
Light, Halogen
○ **1110-900**
Light Post

○ **9078**
Light, LED
○ **1110-900**
Light Post

○ **9073**
Light, LED

○ **1110-900**
Light Post

Forest Packages
Chairs and Stools
Lights and Monitor Mounts
7000 Series
Delivery Systems
Simplified
Factory Options and Parts
General Information
Equipment Warranty
Radiance Operatory
Imagine + Operatory
Operatory Mobile
Sterilization Centers
Orthodontic Cabinetry
Reception/Front Desk Cabinetry
Color Options
Cabinet Warranty
Compressors
Dry Vacuums
Tanks
Wet Vacuums
Utility Room Accessories
Utility Warranty

Standard Features	Factory Options	Part No

Delivery System
Choice of Control Head

Automatic control for handpieces
- 3-way air/water syringe with tubing, 5' (Euro tubing 3')
- 4-hole handpiece tubing, 5', (Euro tubing 3')
- pneumatic master control block w/diaphragm
  - master on/off
- individual handpiece pressure adjustment
- individual water coolant adjustment
- non-retraction water coolant
- air coolant adjustment
- handpiece flush
- handpiece exhaust canister/oil collector
- single handle brake release function
- dual handle brake release function (Euro)
- swivel instrument tray (Euro)
- wet/dry foot control - Shadow powder coat standard

Flexible control arm with pneumatic brake
- vertical travel 28" / horizontal travel 62"

Sidebox with self-contained clean water system w/ quick disconnect, single bottle, 1 1/2 liter
- electrical outlet/UL

Water quick disconnect 1/4" w/flow control
Air quick disconnect 3/8" w/flow control
Toggle valve for city/bottle water routing
Telescoping arm with swivel quad holder bar
Central vacuum accessory package
central vacuum canister with disposable solids collector
- 3-way air/water syringe w/tubing, 5'
- autoclavable standard HVE lever valve w/tubing, 5'
- autoclavable saliva ejector lever valve w/tubing, 5'

External umbilical, 5'
Deluxe utility center
- air pressure regulator w/filter
- master air shut-off valve

! Chair adapter sold separately

Deluxe Cuspidor 1577

One-piece ceramic bowl with touch lever water activator
Automatic cup fill
Timed bowl rinse

Basic Cuspidor 1679

Removable ceramic bowl
Manual cup fill
Timed bowl rinse

	DELIVERY SYSTEM **MODEL CHOICE**	_____ *
	Factory Installed STAR ETorque Electric System	STAR-ETORQUE
	Handpiece illumination system	
	One handpiece (5-hole), accommodates 1 add'l tubing	1700-021-CS
	Add'l handpiece illumination tubing (5-hole)	0017-615-CS
	One handpiece (6-pin), accommodates 1 add'l tubing	1700-019-CS
	Add'l handpiece illumination tubing (6-pin)	0017-603-CS
!	Ancillaries use existing handpiece position (see page 71)	
	Write in selection here _____	
	Write in selection here _____	
!	Handpiece Bundle option (see pages 68-69)	
	Write in selection here _____	
	Additional handpiece position, wet (4485)	1100-189-CS
	Additional handpiece position, air drive only (4485)	1100-190-CS
	Swivel tray, arm-mounted (over control head)	1110-468
	Less sidebox telescoping arm and assistant's instrumentation	1400-000-CS
	Chrome accents	9000-998-CS
	Additional autoclavable standard HVE with tubing, 5' & autoclavable oral dry cup	1400-113-CS
	Hands-Free HVE, see page 91, Write in selection here _____	
	Additional umbilical (maximum 9 feet) (per foot)	1115-999-CS
	3800/3900 chair fixed 2" post mount chair adapter	1115-195
Δ	non 3800/3900 2" post mount chair adapter, fixed (Only sold with unit) (specify chair make and model; non-cancellable/non-returnable)	1115-099-CA
	CUSPIDOR, (sold only with delivery)	
	DELUXE	◯ **1577**
	OR BASIC	◯ **1679**
	Deluxe cuspidor unit mount activation (1577)	1100-480-CS
	LIGHT, HALOGEN (mounting options, see page 45)	◯ **9083**
	OR LED	◯ **9078**
	OR LED	◯ **9073**
•!	Light post (specify light make/model)	
	Light post, 44" (Forest)	1110-900
	Light post, 44" (Pelton & Crane)	1110-890
	MONITOR MOUNT ASSEMBLY (monitor screen not included) (see page 49)	
	Ring mount (used with light post)	1300RM
	Top post mount (used with monitor post)	1300TPM
•	Monitor post (for top post mount)	1331-998

- • Choose only one post when sold with unit
- ! Often overlooked
- Δ Lead time varies

! **Simplified Surface Treatments**

4295SE AVAILABLE IN FOREST GREY ONLY

UNIT PLASTIC FINISHES: ◯ Forest Grey ◯ White

POWDER COAT PAINT FINISHES: ◯ Forest Grey ◯ White

Equipment dimensions, see page 96
Shipping weight estimate:
4295SE & 4485SE Delivery Units 105 lb / 48 kg
4987SE Delivery Unit 110 lb / 50 kg

Forest Packages
Chairs and Stools
Lights and Monitor Mounts
7000 Series
Delivery Systems
Simplified
Factory Options and Parts
General Information
Equipment Warranty
Radiance Operatory
Imagine + Operatory
Operatory Mobile
Sterilization Centers
Orthodontic Cabinetry
Reception/Front Desk Cabinetry
Color Options
Cabinet Warranty
Compressors
Dry Vacuums
Tanks
Wet Vacuums
Utility Room Accessories
Utility Warranty

Fixed Mount without Sidebox, External Umbilical

Choose Your Control Head

Fusion Control Head
Pnuematic 3 HP Syringe
Part Number 4295FE

Standard IC Control Head
Pnuematic 3 HP Syringe
Part Number 4485FE

Euro Control Head
Pnuematic 4 HP Syringe
Part Number 4987FE

Delivery Systems can be mounted on any 2” fixed post mount brand of chair

Optional Equipment Choose One:

○ **1075FE**
Assistant’s Telescoping Arm with Instrumentation

○ **1636FE**
Cuspidor, Basic

○ **1637FE**
Cuspidor, Basic with Assistant’s Instrumentation

○ **9083**
Light, Halogen
○ **1110-820**
Light Post

○ **9078**
Light, LED
○ **1110-820**
Light Post

○ **9073**
Light, LED

○ **1110-820**
Light Post

Forest Packages
Chairs and Stools
Lights and Monitor Mounts
7000 Series
Delivery Systems
Simplified
Factory Options and Parts
General Information
Equipment Warranty
Radiance Operatory
Imagine + Operatory
Operatory Mobile
Sterilization Centers
Orthodontic Cabinetry
Reception/Front Desk Cabinetry
Color Options
Cabinet Warranty
Compressors
Dry Vacuums
Tanks
Wet Vacuums
Utility Room Accessories
Utility Warranty

Standard Features

Delivery System
Choice of Control Head
Automatic control for handpieces
- asepsis 3-way air/water syringe w/tubing, 5' (Euro tubing 3')
- handpiece tubing, 4-hole Midwest, asepsis style, 5' (Euro tubing 3')
- master control block
- master on/off
- individual handpiece pressure adjustment
- individual water coolant adjustment
- non-retraction water coolant
- air coolant adjustment
- handpiece flush
- handpiece exhaust canister/oil collector
- single handle brake release function
- self-contained clean water system w/ quick disconnect, single bottle, 1 1/2 liter
- wet/dry foot control

Flexible control arm w/pneumatic brake
- vertical travel 28" / horizontal travel 62"

External umbilical, 5'
* Deluxe utility center
- air pressure regulator w/filter
- master air shut-off valve

! Chair adapter sold separately

Assistant's Instrumentation 1075FE
Central vacuum accessory package
- central vacuum canister w/disposable solids collector
- asepsis 3-way air/water syringe w/tubing, 5'
- autoclavable standard HVE lever valve w/tubing, 5'
- autoclavable saliva ejector lever valve w/tubing, 5'

External umbilical, 5'
Post mount, 2"

Cuspidor, Basic 1636FE
Gravity drain cuspidor w/swing away arm
- timed bowl rinse
- manual cup fill
- removable ceramic bowl

Post mount adapter, 2"
External 5' umbilical
Water pressure regulator w/filter
Master water shut-off valve

Cuspidor, Basic 1637FE
Same as 1636FE above, w/additional features:
Individual assistant's instrumentation holders
Central vacuum accessory package
- central vacuum canister w/disposable solids collector
- asepsis 3-way air/water syringe w/tubing, 5'
- autoclavable standard HVE lever valve w/tubing, 5'
- autoclavable saliva ejector lever valve w/tubing, 5'

Equipment dimensions, see page 96
Shipping weight estimate:
4295FE & 4485FE Delivery Units 95 lb / 44 kg
4987FE Delivery Unit 100 lb / 46 kg

Factory Options / Part No

	Factory Options	Part No
	DELIVERY SYSTEM **MODEL CHOICE**	_____ *
	Factory Installed STAR ETorque Electric System	STAR-ETORQUE
	Handpiece illumination system	
	One handpiece (5-hole), accommodates 1 add'l tubing	1700-021-CS
	Add'l handpiece illumination tubing (5-hole)	0017-615-CS
	One handpiece (6-pin), accommodates 1 add'l tubing	1700-019-CS
	Add'l handpiece illumination tubing (6-pin)	0017-603-CS
!	Ancillaries use existing handpiece position (see page 71)	
	Write in selection here _____	
	Write in selection here _____	
!	Handpiece Bundle option (see pages 68-69)	
	Write in selection here _____	
	Additional handpiece position, wet (4485)	1100-189-CS
	Additional handpiece position, air drive only (4485)	1100-190-CS
	Assistant's Hygiene Instrumentation (control head mount)	1408-CS
	Swivel tray, arm-mounted (over control head)	1110-468
	Chrome accents	9000-998-CS
	Quick disconnect with flow control, 1/4" (specify air or water)	0016-455-CS
	Additional umbilical (maximum 9 feet) (per foot)	1115-999-CS
	Routing valve kit with water shutoff & regulator/factory installation	1115-315-CS
	Routing valve kit for use with cuspidor/factory installation	1115-316-CS
	3800/3900 chair fixed 2" post mount chair adapter	1115-195
Δ	non 3800/3900 2" post mount chair adapter, fixed (Only sold with unit) (specify chair make and model; non-cancellable/non-returnable)	1115-099-CA
	ASSISTANT'S INSTRUMENTATION	1075FE
	Additional autoclavable standard HVE with tubing, 5' and autoclavable oral dry cup	1400-113-CS
	Hands-Free HVE, see page 91, Write in selection here _____	
*	**CUSPIDOR, BASIC**	◯ **1636FE**
	with assistant's instrumentation	◯ **1637FE**
	Additional autoclavable standard HVE with tubing, 5' & autoclavable oral dry cup (1637FE)	1400-113-CS
	LIGHT, HALOGEN (mounting options, see page 45)	◯ **9083**
	OR LED	◯ **9078**
	OR LED	◯ **9073**
•!	**LIGHT POST** with 2" post clamp (specify light make/model)	
	Light post, 35" (Forest)	1110-820
	Light post, 35" (Pelton & Crane)	1110-822
	MONITOR MOUNT ASSEMBLY (monitor screen not included) (see page 49)	
	Ring mount (used with light post)	1300RM
	Top post mount (used with monitor post)	1300TPM
•	Monitor post (for top post mount)	1331-997

- • Choose only one post when sold with unit
- * When optional cuspidor added, standard utility center housing and cover is used to accommodate two umbilicals.
- ! Often overlooked
- Δ Lead time varies

! **Simplified Surface Treatments**

4295FE AVAILABLE IN FOREST GREY ONLY

UNIT PLASTIC FINISHES: ◯ Forest Grey ◯ White

POWDER COAT PAINT FINISHES: ◯ Forest Grey ◯ White

Forest Packages
Chairs and Stools
Lights and Monitor Mounts
7000 Series
Delivery Systems
Simplified
Factory Options and Parts
General Information
Equipment Warranty
Radiance Operatory
Imagine + Operatory
Operatory Mobile
Sterilization Centers
Orthodontic Cabinetry
Reception/Front Desk Cabinetry
Color Options
Cabinet Warranty
Compressors
Dry Vacuums
Tanks
Wet Vacuums
Utility Room Accessories
Utility Warranty

Fixed Chair Post Mount, External Umbilical

Model 1636
Part Number 1636

Model 1637
Part Number 1637

Model 1075
Part Number 1075

Standard Features	Factory Options	Part No

Cuspidor, Basic 1636
Gravity drain cuspidor w/swing away arm
- timed bowl rinse
- manual cup fill
- removable ceramic bowl

Post mount adapter, 2"
External umbilical, 5'

! Does not include post or chair adapter

Cuspidor, Basic 1637
Same as 1636 above, w/additional features:
Individual assistant's instrumentation holders
Central vacuum accessory package
- central vacuum canister w/disposable solids collector
- 3-way air/water syringe w/tubing, 5'
- autoclavable standard HVE lever valve w/tubing, 5'
- autoclavable saliva ejector lever valve w/tubing, 5'

! Does not include post or chair adapter

Post Mount Vacuum Telescoping Arm 1075
Post mount adapter, 2"
Central vacuum accessory package
- post mounted central vacuum canister w/disposable solids collector
- 3-way air/water syringe w/tubing, 5'
- autoclavable standard HVE lever valve w/tubing, 5'
- autoclavable saliva ejector lever valve w/tubing, 5'

External umbilical, 8'

! Does not include post or chair adapter

	CUSPIDOR, BASIC **MODEL CHOICE**	_____
	Additional autoclavable standard HVE with tubing, 5' & autoclavable oral dry cup (1637)	1400-113-CS
	Hands-Free HVE, see page 91, Write in selection here	_____
	Quick disconnect with flow control, 1/4" (specify air or water)	0016-455-CS
!	Self-contained clean water system with quick disconnect	1700-310-CS
	Standard utility center housing & cover	1115-020
▶	Standard utility center	1115-001
	Additional umbilical (per foot)	1115-999-CS
!	**MOUNTING POSTS** 2" diameter:	
	Control post with cap, 18"	1110-487
!	**LIGHT POSTS: 44"** 2" diameter	
	Forest model	1110-794
	Pelton & Crane	1110-785
	ASSISTANT'S INSTRUMENTATION	1075
	Additional standard autoclavable HVE with tubing, 5' & autoclavable oral dry cup	1400-113-CS
!	Self-contained clean water system with quick disconnect	1700-323-CS
	Assistant's air shut-off & regulator utility center w/o housing & cover	1115-008
	Standard utility center housing & cover	1115-020
	Additional umbilical (per foot)	1115-998-CS

▶ Standard utility center includes: housing, cover, air & water pressure regulator with filter, master air and water shut-off valves.

! Often overlooked

⚠ *WARNING: Isolated water sources (as opposed to city water hook-up) are highly recommended to allow full control of the source and quality of water circulating through the syringe and cuspidor water lines. If you do not have a water quality protocol, the optional self-contained water system allows you to isolate this product from the municipal water supply, however, it requires monitoring, maintenance and disinfection of the water lines, reservoir water bottle and source water.*

Equipment dimensions, see page 96
Shipping weight estimate:
1636 17 lb / 8 kg
1637 20 lb / 9 kg
1075 15 lb / 7 kg

! **Simplified Surface Treatments**

UNIT PLASTIC FINISHES:	◯ Forest Grey	◯ White
POWDER COAT PAINT FINISHES:	◯ Forest Grey	◯ White

Forest Packages
Chairs and Stools
Lights and Monitor Mounts
7000 Series
Delivery Systems
Simplified
Factory Options and Parts
General Information
Equipment Warranty
Radiance Operatory
Imagine + Operatory
Operatory Mobile
Sterilization Centers
Orthodontic Cabinetry
Reception/Front Desk Cabinetry
Color Options
Cabinet Warranty
Compressors
Dry Vacuums
Tanks
Wet Vacuums
Utility Room Accessories
Utility Warranty

Rear Beneath Shelf or Work Surface Mount

Model 1284 - Mounts under floating work surface

Shown with optional Clean Water System 1700-312 not included in price Assistant's Utilities 1115-008 sold separately

Part Number 1284

Model 1286 - Mounts beneath shelf

Optional Clean Water System 1700-312 and Assistant's Utilities 1115-008 sold separately

Part Number 1286

Standard Features

Horizontal Assistant's Delivery System 1284/1286

Central vacuum accessory package, swing mount
- arm-mounted central vacuum canister w/disposable solids collector
- 3-way air/water syringe w/tubing, 5'
- autoclavable standard HVE lever valve w/ tubing, 5'
- autoclavable saliva ejector lever valve w/ tubing, 5'

Horizontal surface mount
Link assembly, arm to plate (1286)
External umbilical, 7'

Factory Options

	Factory Options	Part No
	DELIVERY SYSTEM **MODEL CHOICE**	_____
	Additional autoclavable standard HVE with tubing, 5' & autoclavable oral dry cup	1400-113-CS
	Hands-free HVE, see page 91, Write in selection here	_____
	Slide mount, 7 5/8" extension (1284)	1700-142
!	Standard utility center housing & cover	1115-020
!	Self-contained clean water system with quick disconnect, single bottle	1700-312
!	Assistant's air shut-off & regulator utility center w/o housing & cover	1115-008

! Often overlooked

⚠ *WARNING: Isolated water sources (as opposed to city water hook-up) are highly recommended to allow full control of the source and quality of water circulating through the syringe and cuspidor water lines. If you do not have a water quality protocol, the optional self-contained water system allows you to isolate this product from the municipal water supply, however, it requires monitoring, maintenance and disinfection of the water lines, reservoir water bottle and source water.*

Mounting plate dimensions, see page 99

Shipping weight estimate:
1284 12 lb / 5 kg
1286 14 lb / 6 kg

! **Simplified Surface Treatments**

UNIT PLASTIC FINISHES: ◯ Forest Grey

POWDER COAT PAINT FINISHES: ◯ Forest Grey

Forest Packages
Chairs and Stools
Lights and Monitor Mounts
7000 Series
Delivery Systems
Simplified
Factory Options and Parts
General Information
Equipment Warranty
Radiance Operatory
Imagine + Operatory
Operatory Mobile
Sterilization Centers
Orthodontic Cabinetry
Reception/Front Desk Cabinetry
Color Options
Cabinet Warranty
Compressors
Dry Vacuums
Tanks
Wet Vacuums
Utility Room Accessories
Utility Warranty

Side Cabinet & Wall Mount

Model 3235

12” Rigid Arm Cabinet Mount

Part Number 3235

Model 3230

22” Rigid Arm Wall Mount

Part Number 3230

Standard Features

Doctor Standard IC Delivery System 3235/3230

Standard IC control head
- automatic control for three handpieces
- 3-way air/water syringe w/tubing, 5’
- 4-hole handpiece tubing, 5’
- pneumatic master control block w/diaphragm
- master on/off
- individual handpiece pressure adjustment
- individual water coolant adjustment
- non-retraction water coolant
- air coolant adjustment
- handpiece flush
- handpiece exhaust canister/oil collector
- single handle brake release function
- self-contained clean water system w/quick disconnect, single bottle, 1 1/2 liter
- wet/dry foot control - Shadow powder coat standard

Flexible control arm w/pneumatic brake (3235)
- cabinet vertical mount 12” rigid arm & 18” flex arm

Flexible control arm w/pneumatic brake (3230)
- wall vertical mount 22” rigid arm & 18” flex arm

External umbilical, 5’

Standard utility center housing and cover (3230)

Air pressure regulator w/filter

Master air shut-off valve

Factory Options

DELIVERY SYSTEM MODEL CHOICE	Part No
Factory Installed STAR ETorque Electric System	STAR-ETORQUE
Handpiece Illumination System	
One handpiece (5-hole), accommodates 1 add’l tubing	1700-021-CS
Add’l handpiece illumination tubing (5-hole)	0017-615-CS
One handpiece (6-pin), accommodates 1 add’l tubing	1700-019-CS
Add’l handpiece illumination tubing (6-pin)	0017-603-CS
Assistant’s hygiene instrumentation (control head mount)	1408-CS
Quick disconnect with flow control, 1/4” (specify air or water)	0016-455-CS
Swivel tray, arm-mounted (over control head)	1110-468
Standard utility center housing & cover (3235)	1115-020
Additional umbilical (per foot)	1115-999-CS
Routing valve kit with water shutoff & regulator/factory installation	1115-315-CS
Wall mount panel, 16” x 18”	1110-586-CS

! Often overlooked

! Simplified Surface Treatments

UNIT PLASTIC FINISHES: ◯ Forest Grey

POWDER COAT PAINT FINISHES: ◯ Forest Grey

Mounting plate dimensions, see page 109

Shipping weight estimate:
3235, 3230 50 lb / 23 kg

Forest Packages
Chairs and Stools
Lights and Monitor Mounts
7000 Series
Delivery Systems
Simplified
Factory Options and Parts
General Information
Equipment Warranty
Radiance Operatory
Imagine + Operatory
Operatory Mobile
Sterilization Centers
Orthodontic Cabinetry
Reception/Front Desk Cabinetry
Color Options
Cabinet Warranty
Compressors
Dry Vacuums
Tanks
Wet Vacuums
Utility Room Accessories
Utility Warranty

Rear or Side Beneath Counter Mount

Model 2400

Beneath Counter Mount with swivel included
Countertop/work surface not included

Part Number 2400

Optional Beneath Counter Slide 1700-140

Optional Folding Arm Assembly 1110-115-CS
(Not available with STAR-ETORQUE option)

Standard Features	Factory Options	Part No
Doctor Standard IC Delivery System 2400	**DELIVERY SYSTEM**	**MODEL CHOICE**
Beneath counter swivel mount (work surface not included)	Factory Installed STAR ETorque Electric System	STAR-ETORQUE
Standard IC control head	Handpiece Illumination System	
automatic control for three handpieces	One handpiece (5-hole), accommodates 1 add'l tubing	1700-021-CS
3-way air/water syringe w/tubing, 5'	Add'l handpiece illumination tubing (5-hole)	0017-615-CS
4-hole handpiece tubing, 5'	One handpiece (6-pin), accommodates 1 add'l tubing	1700-019-CS
pneumatic master control block w/diaphragm	Add'l handpiece illumination tubing (6-pin)	0017-603-CS
master on/off	Assistant's hygiene instrumentation (control head mount)	1408-CS
individual handpiece pressure adjustment	Quick disconnect with flow control, 1/4" (specify air or water)	0016-455-CS
individual water coolant adjustment	Slide mount with swivel, 7 5/8" extension	1700-140
non-retraction water coolant	Folding arm assembly, 8" x 12" with wall mount	1110-115-CS
air coolant adjustment	Standard utility center housing & cover	1115-020
handpiece flush	Routing valve kit with water shutoff & regulator/factory installation	1115-315-CS
handpiece exhaust canister/oil collector		
self-contained clean water system w/quick disconnect, single bottle, 1 1/2 liter		
wet/dry foot control - Shadow powder coat standard		
External braided umbilical, 7'		
Air pressure regulator w/ filter		
Master air shut-off valve		

! Often overlooked

Mounting plate dimensions, see page 109
Shipping weight estimate:
2400 28 lb / 13kg

! Simplified Surface Treatments

UNIT PLASTIC FINISHES: ◯ Forest Grey

POWDER COAT PAINT FINISHES: ◯ Forest Grey

Forest Packages
Chairs and Stools
Lights and Monitor Mounts
7000 Series
Delivery Systems
Simplified
Factory Options and Parts
General Information
Equipment Warranty
Radiance Operatory
Imagine + Operatory
Operatory Mobile
Sterilization Centers
Orthodontic Cabinetry
Reception/Front Desk Cabinetry
Color Options
Cabinet Warranty
Compressors
Dry Vacuums
Tanks
Wet Vacuums
Utility Room Accessories
Utility Warranty

Rear Beneath Counter Mount

Panel Mount is recessed in cabinet separate from duo articulating instrument delivery 2184.

Model 2184

Mounts under floating work surface.

Part Number 2184

Model 2186

Mounts under floating work surface.

Part Number 2186

Standard Features	Factory Options	Part No
Duo Delivery System 2184/2186	**DELIVERY SYSTEM**	**MODEL CHOICE**
Automatic panel control for three handpieces	Factory Installed STAR ETorque Electric System	STAR-ETORQUE
3-way air/water syringe w/tubing, 5’	Handpiece Illumination System	
4-hole handpiece tubing, 5’	One handpiece (5-hole), accommodates 1 add’l tubing	1700-021-CS
pneumatic master control block w/diaphragm	Add’l handpiece illumination tubing (5-hole)	0017-615-CS
master on/off	One handpiece (6-pin), accommodates 1 add’l tubing	1700-019-CS
individual handpiece pressure adjustment	Add’l handpiece illumination tubing (6-pin)	0017-603-CS
individual water coolant adjustment	Additional standard autoclavable HVE position with tubing, 5’ & autoclavable oral dry cup	1400-113-CS
non-retraction water coolant	Hands-Free HVE, see page 91, Write in selection here	_____
air coolant adjustment	Slide mount, 7 5/8” extension (2184)	1700-142
handpiece flush	Touchpad for 3900 chair (25 ft. Cable)	1700-081-1-CS
wet/dry foot control - Shadow powder coat standard	Standard utility center housing & cover	1115-020
Central vacuum accessory package, swing mount	! Quick disconnect for air or water - dealer installed (see page 94)	
arm-mounted central vacuum canister w/disposable solids collector	! Routing valve kit for city water - dealer installed (see page 94)	
3-way air/water syringe w/tubing, 5’		
autoclavable standard HVE lever valve w/tubing, 5’		
autoclavable saliva ejector lever valve w/tubing, 5’		
Articulating left/right instrument positioning		
Self-contained clean water system w/quick disconnect, single bottle, 1 1/2 liter		
External umbilical, 7’	! Often overlooked	
Air pressure regulator w/filter		
Master air shut-off valve		

Mounting plate dimensions, see pages 108
Panel cut-out, see page 108
Shipping weight estimate:
2184 30 lb / 14 kg
2186 30 lb / 14 kg

! **Simplified Surface Treatments**

UNIT PLASTIC FINISHES: ◯ Forest Grey

POWDER COAT PAINT FINISHES: ◯ Forest Grey

Forest Packages
Chairs and Stools
Lights and Monitor Mounts
7000 Series
Delivery Systems
Simplified
Factory Options and Parts
General Information
Equipment Warranty
Radiance Operatory
Imagine + Operatory
Operatory Mobile
Sterilization Centers
Orthodontic Cabinetry
Reception/Front Desk Cabinetry
Color Options
Cabinet Warranty
Compressors
Dry Vacuums
Tanks
Wet Vacuums
Utility Room Accessories
Utility Warranty

Rear Beneath Counter Mount

Panel Mount is recessed in cabinet separate from duo articulating instrument delivery 2184BC.

Model 2184BC

Universal Heavy-Duty Mounting Plate 11” x 14 1/2” included (mounts to under counter)
Specify cabinet manufacturer

Part Number 2184BC

Model 2186BC

Universal Heavy-Duty Mounting Plate 11” x 14 1/2” included (mounts to under counter)
Specify cabinet manufacturer

Part Number 2186BC

Standard Features

Duo Delivery System 2184BC/2186BC

Automatic panel control for three handpieces
- 3-way air/water syringe w/tubing, 5’
- 4-hole handpiece tubing, 5’
- pneumatic master control block w/diaphragm
- master on/off
- individual handpiece pressure adjustment
- individual water coolant adjustment
- non-retraction water coolant
- air coolant adjustment
- handpiece flush
- wet/dry foot control - Shadow powder coat standard

Central vacuum accessory package, swing mount
- arm-mounted central vacuum canister w/disposable solids collector
- 3-way air/water syringe w/tubing, 5’
- autoclavable standard HVE lever valve w/tubing, 5’
- autoclavable saliva ejector lever valve w/tubing, 5’

Articulating left/right instrument positioning
Self-contained clean water system w/quick disconnect, single bottle, 1 1/2 liter
Solid work surface, 19” x 24”
▶ Beneath counter rigid arm assembly w/heavy duty mounting plate, 11” x 14 1/2”
External umbilical, 7’
Air pressure regulator w/filter
Master air shut-off valve

▶ **Beneath Counter Mount**

Mounting plate dimensions, see pages 108
Panel cut-out, see page 108
Shipping weight estimate:
2184BC 85 lb / 36 kg
2186BC 85 lb / 36 kg

Factory Options

	DELIVERY SYSTEM	MODEL CHOICE / Part No
	Factory Installed STAR ETorque Electric System	STAR-ETORQUE
	Handpiece Illumination System	
	One handpiece (5-hole), accommodates 1 add’l tubing	1700-021-CS
	Add’l handpiece illumination tubing (5-hole)	0017-615-CS
	One handpiece (6-pin), accommodates 1 add’l tubing	1700-019-CS
	Add’l handpiece illumination tubing (6-pin)	0017-603-CS
	Additional standard autoclavable HVE position with tubing, 5’ & autoclavable oral dry cup	1400-113-CS
	Hands-Free HVE, see page 91, Write in selection here	_____
	Quick disconnect with flow control 1/4” (for water)	0016-454-CS
	Quick disconnect with flow control 3/8” (for air)	0016-456-CS
	Storage organizer with bins & frame	1110-179-CS
	Swivel tray (requires purchase of 1110-179-CS)	1110-908-CS
	Swivel tray (mounts without storage organizer)	1110-482-CS
	Monitor mount assembly (monitor screen not included) (requires purchase of 1110-179-CS)	1300-025-CS
	Touchpad for 3900 chair (25 ft. Cable)	1700-081-1-CS
	Standard utility center housing & cover	1115-020
	Routing valve kit with water shutoff & regulator/factory installation	1115-315-CS
	Standard laminate work surface in lieu of solid surface	0023-003-SS-LAM
Δ	Special color laminate or solid work surface upgrade (call for price and leadtime)	0023-003-X / 0023-003-SSV

! Often overlooked
Δ Lead time varies

! **Simplified Surface Treatments**

UNIT PLASTIC FINISHES: ◯ Forest Grey
POWDER COAT PAINT FINISHES: ◯ Forest Grey

SOLID WORK SURFACE:
CORIAN®: ◯ Antarctica
WILSONART®: ◯ Arctic Melange ◯ Baja Melange
MEGANITE®: ◯ Cinder Granite ◯ Goldrush Gemstone ◯ Moonstone ◯ Platinum Granite ◯ Rocky Road Granite ◯ Silver Mist ◯ Starry Starry Night

Forest Packages
Chairs and Stools
Lights and Monitor Mounts
7000 Series
Delivery Systems
Simplified
Factory Options and Parts
General Information
Equipment Warranty
Radiance Operatory
Imagine + Operatory
Operatory Mobile
Sterilization Centers
Orthodontic Cabinetry
Reception/Front Desk Cabinetry
Color Options
Cabinet Warranty
Compressors
Dry Vacuums
Tanks
Wet Vacuums
Utility Room Accessories
Utility Warranty

Panel Mounts

Model 2500

Part Number 2500

Optional Assistant's Hygiene Instrumentation 1408-CS

Model 2520

Part Number 2520

Standard Features	Factory Options	Part No

Doctor Control 2500

Automatic control for three handpieces
- 3-way air/water syringe w/tubing, 7'
- 4-hole handpiece tubing, 7'
- pneumatic master control block w/diaphragm
- master on/off
- individual handpiece pressure adjustment
- individual water coolant adjustment
- non-retraction water coolant
- air coolant adjustment
- self-contained clean water system w/quick disconnect, single bottle, 1 1/2 liter
- wet/dry foot control - Shadow powder coat standard

Remote mount holder assembly w/control tubing, 6'
External umbilical, 6'
Air pressure regulator w/filter
Master air shut-off valve

Doctor Control 2520

Automatic control for two handpieces
- 3-way air/water syringe w/tubing, 7'
- 4-hole handpiece tubing, 7'
- pneumatic master control block w/diaphragm
- master on/off
- individual handpiece pressure adjustment
- non-retraction water coolant
- air coolant adjustment
- self-contained clean water system w/quick disconnect, single bottle, 1 1/2 liter
- wet/dry foot control - Shadow powder coat standard

Remote mount holder assembly w/control tubing, 6'
External umbilical, 6'
Air pressure regulator w/filter
Master air shut-off valve

DELIVERY SYSTEM	MODEL CHOICE _____
Handpiece Illumination System	
One handpiece (5-hole), accommodates 1 add'l tubing	1700-021-CS
Add'l handpiece illumination tubing (5-hole)	0017-615-CS
One handpiece (6-pin), accommodates 1 add'l tubing	1700-019-CS
Add'l handpiece illumination tubing (6-pin)	0017-603-CS
Standard utility center housing & cover	1115-020
Assistant's hygiene instrumentation with extended 10 1/2" holder bar (Drain Tubing 12') standard autoclavable HVE, saliva ejector with 2 holders and canister	1408-CS

! Quick disconnect for air or water - dealer installed (see page 94)

! Routing valve kit for city water - dealer installed (see page 94)

! Often overlooked

Wall/cabinet cut-out dimensions, see page 107

Shipping weight estimate:
2500 18 lb / 8 kg
2520 15 lb / 7 kg

! Simplified Surface Treatments

UNIT PLASTIC FINISHES: ◯ Forest Grey

POWDER COAT PAINT FINISHES: ◯ Forest Grey

Forest Packages
Chairs and Stools
Lights and Monitor Mounts
7000 Series
Delivery Systems
Simplified
Factory Options and Parts
General Information
Equipment Warranty
Radiance Operatory
Imagine + Operatory
Operatory Mobile
Sterilization Centers
Orthodontic Cabinetry
Reception/Front Desk Cabinetry
Color Options
Cabinet Warranty
Compressors
Dry Vacuums
Tanks
Wet Vacuums
Utility Room Accessories
Utility Warranty

Rear or Side Mount Compact Controls

Model MT600
Work surface not included

Part Number MT600

Model MT610
Work surface not included

Part Number MT610

Standard Features		Factory Options	Part No
Doctor Control with 3 HP		**DELIVERY SYSTEM**	**MODEL CHOICE** _____
Top Shelf Mount	MT600TS	Handpiece Illumination System	
Beneath Shelf Mount w/Swivel	MT600BS	One handpiece (5-hole), accommodates 1 add'l tubing	1700-021-CS
Doctor Control with 2 HP		Add'l handpiece illumination tubing (5-hole)	0017-615-CS
Top Shelf Mount	MT610TS	One handpiece (6-pin), accommodates 1 add'l tubing	1700-019-CS
Beneath Shelf Mount w/Swivel	MT610BS	Add'l handpiece illumination tubing (6-pin)	0017-603-CS
		Slide mount with swivel, 7 5/8" extension (order BS)	1700-140
		Folding arm assembly, 8" x 12" with wall mount (order TS)	1110-115-CS
		Standard utility center housing & cover	1115-020
		Assistant's hygiene instrumentation with extended 10 1/2" holder bar (Drain Tubing 12') standard autoclavable HVE, saliva ejector with 2 holders & canister	1408-CS
		! Quick disconnect for air or water - dealer installed (see page 94)	
		! Routing valve kit for city water - dealer installed (see page 94)	
		! Often overlooked	

All Units Include the Following Features:
Automatic control for three handpieces (MT600), or
Automatic control for two handpieces (MT610)
3-way air/water syringe w/tubing, 4'
- 4-hole handpiece tubing, 4'
- pneumatic master control block w/diaphragm
- master on/off
- individual handpiece pressure adjustment
- non-retraction water coolant
- air coolant adjustment
- self-contained clean water system w/quick disconnect, single bottle, 1 1/2 liter
- wet/dry foot control - Shadow powder coat standard

External umbilical, 12'
Air pressure regulator w/filter
Master air shut-off valve

Mounting plate dimensions, see page 109
Shipping weight estimate:
MT600, MT610 20 lb / 10 kg

! Simplified Surface Treatments

UNIT PLASTIC FINISHES: ◯ Forest Grey

POWDER COAT PAINT FINISHES: ◯ Forest Grey

Forest Packages
Chairs and Stools
Lights and Monitor Mounts
7000 Series
Delivery Systems
Simplified
Factory Options and Parts
General Information
Equipment Warranty
Radiance Operatory
Imagine + Operatory
Operatory Mobile
Sterilization Centers
Orthodontic Cabinetry
Reception/Front Desk Cabinetry
Color Options
Cabinet Warranty
Compressors
Dry Vacuums
Tanks
Wet Vacuums
Utility Room Accessories
Utility Warranty

Mobile Carts

Shown with optional swivel tray, arm mounted 1110-731

Model 5350

Part Number 5350

Model 5355

Part Number 5355

Standard Features	Factory Options	Part No
Doctor Standard IC Cart 5350	**DELIVERY SYSTEM**	**MODEL CHOICE** _____
Standard IC Control Head	Factory Installed STAR ETorque Electric System	STAR-ETORQUE
automatic control for three handpieces	Handpiece Illumination System	
3-way air/water syringe w/tubing, 4’	One handpiece (5-hole), accommodates 1 add’l tubing	1700-021-CS
4-hole handpiece tubing, 4’	Add’l handpiece illumination tubing (5-hole)	0017-615-CS
pneumatic master control block w/diaphragm	One handpiece (6-pin), accommodates 1 add’l tubing	1700-019-CS
master on/off	Add’l handpiece illumination tubing (6-pin)	0017-603-CS
individual handpiece pressure adjustment	Additional standard autoclavable HVE with tubing, 5’ & autoclavable oral dry cup (5355)	1400-113-CS
individual water coolant adjustment	Hands-Free HVE, see page 91, Write in selection here	_____
non-retraction water coolant	Quick disconnect with flow control, 1/4” (specify air or water)	0016-455-CS
air coolant adjustment	Swivel tray, arm-mounted	1110-731
handpiece flush	Foot control support shelf, clamps to 2” base	0023-665
handpiece exhaust canister/oil collector	Additional umbilical (per foot)	1115-999-CS
self-contained clean water system w/quick disconnect, single bottle 1 1/2 liter	Routing valve kit with water shutoff & regulator/factory installation	1115-315-CS
wet/dry foot control - Shadow powder coat standard		
Adjustable height frame		
Twin wheel hard floor casters		
External 7’ umbilical		
Standard utility center housing and cover		
Air pressure regulator w/filter		
Master air shut-off valve		
Duo Standard IC Cart 5355	! Often overlooked	
Same as above, w/additional features:		
Central vacuum canister w/disposable solids collector		
autoclavable standard HVE lever valve w/tubing, 5’		
autoclavable saliva ejector lever valve w/tubing, 5’		

Equipment dimensions, see page 110
Shipping weight estimate:
5350 50 lb / 23 kg
5355 55 lb / 25 kg

! **Simplified Surface Treatments**

UNIT PLASTIC FINISHES: ◯ Forest Grey

POWDER COAT PAINT FINISHES: ◯ Forest Grey

Forest Packages
Chairs and Stools
Lights and Monitor Mounts
7000 Series
Delivery Systems
Simplified
Factory Options and Parts
General Information
Equipment Warranty
Radiance Operatory
Imagine + Operatory
Operatory Mobile
Sterilization Centers
Orthodontic Cabinetry
Reception/Front Desk Cabinetry
Color Options
Cabinet Warranty
Compressors
Dry Vacuums
Tanks
Wet Vacuums
Utility Room Accessories
Utility Warranty

Standard Chair Adapters - for 2” Post

3900/3800 fixed accommodates external umbilical	1115-195

Monitor Posts - 2” Diameter with Oilite Bushing

(used with 1300TPM)

30” with dual slot, fixed sidebox mount	1331-998
30” with slot & post clamp, fixed mount	1331-997

Light Posts - 2” with Light Bushing

35” fixed (includes post clamp)	
Forest	1110-820
Pelton & Crane	1110-822
44” fixed	
Forest	1110-794
Pelton & Crane	1110-785
44” fixed with slot (for monitor cord)	
Forest	1110-050
44” fixed with slot (sidebox access)	
Forest	1110-900
Pelton & Crane	1110-890
44” fixed with dual slot (for monitor cord & sidebox access)	
Forest	1110-170

Forest Packages
Chairs and Stools
Lights and Monitor Mounts
7000 Series
Delivery Systems
Simplified
Factory Options and Parts
General Information
Equipment Warranty
Radiance Operatory
Imagine + Operatory
Operatory Mobile
Sterilization Centers
Orthodontic Cabinetry
Reception/Front Desk Cabinetry
Color Options
Cabinet Warranty
Compressors
Dry Vacuums
Tanks
Wet Vacuums
Utility Room Accessories
Utility Warranty

250 Watt (Universal Power Supply)

Used when two or more ancillary devices are ordered with a Forest Operatory Light (excluding the 3900 soft-touch massager power source)

- Provides power for MULTIPLE electrical accessories such as: fiber-optics operatory lights, scalers, curing lights, and electric micro motors
- Size: 7.5” - 5.5” - 2.5”. Easily fits in all Forest floor boxes
- Quick disconnect connectors for all of Forest ancillary products
- Available in both 230 volt and 110 volt
- Auto-resettable Klixon switch: inbuilt over current and over temperature protection, eliminating the need for manually changing fuses or circuit breakers

Please note: built in air-electric switch, power source turns on/off w/pilot air only

Handpiece Illumination System, 5 hole with NEW integrated LED bulb

Factory option 1700-021-CS

Handpiece Illumination System, 6 Pin

Factory option 1700-019-CS

- Dual channel outputs individually adjustable from 2.5VDC to 4.0VDC
- Accommodates one additional handpiece tubing
- Illumination delay (adjustable between 0-15 seconds) can be set individually for two handpieces
- Automatic activation of handpiece illumination w/the dental unit foot control
- Simple installation into any new or existing dental unit
- Indicator LED’s confirms correct operation of the control module
- Powers all brands of optic handpieces and air-motors
- ISO standard handpiece terminal w/stainless steel nut
- Handpiece tubing, 7’ long (4’ to 5’ installed)
- Power transformer, output 24VAC, 1.05 Amps
- Installation hardware and instructions

Handpiece Illumination Tubing, 5 hole with NEW integrated LED bulb

Factory option 0017-615-CS

Used to replace power optic handpiece tubing

- ISO standard power optic handpiece terminal w/stainless steel nut
- Handpiece tubing, 7’ (4’ to 7’ factory installed)

Handpiece Illumination Tubing, 6 pin

Factory option 0017-603-CS

Used to replace power optic handpiece tubing

- ISO standard power optic handpiece terminal w/stainless steel adapter and nut
- Handpiece tubing, 7’ (4’ to 7’ factory installed)

Forest Packages
Chairs and Stools
Lights and Monitor Mounts
7000 Series
Delivery Systems
Simplified
Factory Options and Parts
General Information
Equipment Warranty
Radiance Operatory
Imagine + Operatory
Operatory Mobile
Sterilization Centers
Orthodontic Cabinetry
Reception/Front Desk Cabinetry
Color Options
Cabinet Warranty
Compressors
Dry Vacuums
Tanks
Wet Vacuums
Utility Room Accessories
Utility Warranty

Standard Deluxe Air/Water Syringe with Quick-release Tip

Factory option	1109-010

with Sheathed Tubing Assembly, 5’

Sterling	1107-755
Shadow	1107-755-SH
Black	1107-755-BLK

Straight deluxe Air/Water Syringe with Quick-release Tip

Factory option	1109-025

with Sheathed Tubing Assembly, 4’

Sterling	1109-585-STG
Shadow	1109-585-SHW
Black	1109-585-BLK

Standard Deluxe One Button Syringe with Quick-release Tip

Factory option	1109-035

with Sheathed Tubing Assembly, 5’

Sterling	1109-485-STG
Shadow	1109-485-SHW
Black	1109-485-BLK

Additional HVE with Tubing 5’ and Autoclavable Oral Dry Cup

Factory option	1400-113-CS

- Standard vacuum valve

Oral dry cup only	1400-010

Hands-Free HVE Chair-Mounted Flexible HVE Holder w/ HVE and 6’ Tubing

Factory options

White Holder Arm w/Sterling HVE Tubing	1400-279-STG
White Holder Arm w/Grey HVE Tubing	1400-279-GRY
Black Holder Arm w/Shadow HVE Tubing	1400-279-SHW
Black Holder Arm w/Black HVE Tubing	1400-279-BLK
Oral dry cup (pictured above)	1400-010

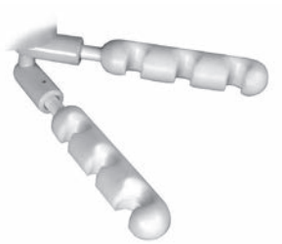

Dual Articulating Quad Holder Assembly

Factory option	0024-227-CS
4 standard, 4 universal, White	0024-227
4 standard, 4 universal, Forest Grey	0024-227-G
4 standard, 4 universal, Designer Friendly® (specify color)	0024-227-C
8 universal, White	0024-224
8 universal, Forest Grey	0024-224-G
8 universal, Designer Friendly (specify color)	0024-224-C

Support Shelf

Factory option	0023-665
Forest Grey	0023-665-G

- Provides adequate support for use of foot control while allowing cart mobility.

Forest Packages
Chairs and Stools
Lights and Monitor Mounts
7000 Series
Delivery Systems
Simplified
Factory Options and Parts
General Information
Equipment Warranty
Radiance Operatory
Imagine + Operatory
Operatory Mobile
Sterilization Centers
Orthodontic Cabinetry
Reception/Front Desk Cabinetry
Color Options
Cabinet Warranty
Compressors
Dry Vacuums
Tanks
Wet Vacuums
Utility Room Accessories
Utility Warranty

Contoured Utility Center Housing and Cover

Factory option	3900-101
Forest Grey	3900-101-G
Shadow	3900-101-SH
Designer Friendly® (specify color)	3900-101-C

Complete Contoured Utility Center

Factory option	3900-102
Forest Grey	3900-102-G
Shadow	3900-102-SH
Designer Friendly (specify color)	3900-102-C

- Air and water pressure regulator w/filter
- Master air and water shut-off valves

Deluxe Utility Center Housing and Cover

Forest Grey	1115-007-G
Shadow	1115-007-SH
Black	1115-007-BLK
White	1115-007-WH

- Rear umbilical access

Forest Grey	1115-009-G
Shadow	1115-009-SH
Black	1115-009-BLK
White	1115-009-WH

- Right umbilical access

Complete Deluxe Utility Center

Forest Grey	1115-005-G
Shadow	1115-005-SH
Black	1115-005-BLK
White	1115-005-WH

- Rear umbilical access
- Air and water pressure regulator w/filter
- Master air and water shut-off valves

Standard Utility Center Housing and Cover

Factory option	1115-020
Forest Grey	1115-020-G
Designer Friendly (specify color)	1115-020-C

Complete Standard Utility Center

Factory option	1115-001
Forest Grey	1115-001-G
Designer Friendly (specify color)	1115-001-C

- Air and water pressure regulator w/ filter
- Master air and water shut-off valves

Recessed utility center housing and cover

1115-305

Forest Packages
Chairs and Stools
Lights and Monitor Mounts
7000 Series
Delivery Systems
Simplified
Factory Options and Parts
General Information
Equipment Warranty
Radiance Operatory
Imagine + Operatory
Operatory Mobile
Sterilization Centers
Orthodontic Cabinetry
Reception/Front Desk Cabinetry
Color Options
Cabinet Warranty
Compressors
Dry Vacuums
Tanks
Wet Vacuums
Utility Room Accessories
Utility Warranty

Tray Holder Assembly, Use with 1095/1295 Rear Pivot Assistant's Instrumentation

Factory option	1110-680
Forest Grey	1110-680-G
Designer Friendly® (specify color)	1110-680-C

Includes:

- Pivoting powder coated tray holder, 9 3/4" x 13 1/2"
- Clamp assembly adapts to 1 1/2" horizontal or vertical post

Swivel Bracket

Slide with Swivel 7 5/8" Extension, use w/1284, 2184, 2400, MT's

Factory option (2400/MT's)	1700-140
Forest Grey (2400/MT's)	1700-140-G
Factory option (1284, 2184) (Does not include swivel bracket)	1700-142

Folding Arm Assembly, use with 2400, MT's

Factory option	1110-115-CS
Forest Grey	1110-115-G

Includes:

- 8" folding arm with 1/2" pin and umbilical retainer
- 4" x 4" wall mounting plate which accepts 1/2" pin
- 12" folding arm with 1/2" pin and umbilical retainer
- Control mount with 1/2" pin

Universal Heavy Duty Mounting Plate

10" x 24" beneath counter	0010-084-BLK
11" x 14 1/2" beneath counter	0010-086-BLK
10" x 24" in lieu of 11" x 14 1/2"	0010-084-CS

26" Rigid with 24" Flexible Arm In Lieu of Top Post Mount

Factory option	1110-771-RM

22" Rigid with 18" Flexible Arm In Lieu of Top Post Mount

Factory option	1110-536-RM

26" Rigid With 18" Flexible Arm In Lieu Of Top Post Mount

Factory option	1110-537-RM

- Designed for use with 2" diameter post.

Floating Work Surface Arm Assembly, 20"

Forest Grey	0023-815-G
Designer Friendly (specify color)	0023-815-C

Forest Packages
Chairs and Stools
Lights and Monitor Mounts
7000 Series
Delivery Systems
Simplified
Factory Options and Parts
General Information
Equipment Warranty
Radiance Operatory
Imagine + Operatory
Operatory Mobile
Sterilization Centers
Orthodontic Cabinetry
Reception/Front Desk Cabinetry
Color Options
Cabinet Warranty
Compressors
Dry Vacuums
Tanks
Wet Vacuums
Utility Room Accessories
Utility Warranty

Flow Control

Quick Disconnects

1/4" Female and Male QD with Flow Control

Factory Installed 0016-454-CS

1/4" Female QD with flow control, black/grey/shadow/white

Dealer Installed 0016-454-BLK /-G /-SH /-WH

1/4" Female and Male QD With Flow Control, Arm and Control Head Mount

Factory Installed 0016-455-CS

1/4" Female QD with Flow Control, Arm and Control Head Mount, Black /Grey

Dealer Installed 0016-455-BLK /-G

3/8" Female and Male QD With Flow Control, Factory Installed

Factory Installed 0016-456-CS

3/8" Female QD with Flow Control, Black /Grey/Shadow/White

Dealer Installed 0016-456-BLK /-G /-SH /-WH

Water Shut-Off and Regulator

Routing Valve Kits

— Check with Local Authorities About Installation Requirements

Factory installed with water shut-off and regulator 1115-315-CS

Factory installed without water shut-off and regulator 1115-316-CS

Dealer Installed Includes:

Toggle Valve/Bracket/Tubing/Water Shut-Off/Regulator

black / grey / shadow / white 1115-310-BLK / -G / -SH / -WH

Dealer Installed Includes: Toggle Valve, Bracket, And Tubing

black / grey / shadow / white 1115-312-BLK / -G / -SH / -WH

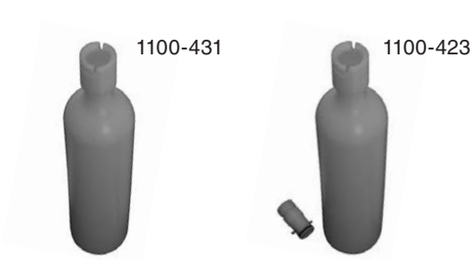

1100-431 1100-423

High Density Bottle

1 1/2" liter with quick disconnect adapter 1100-431

1 1/2" liter with quick disconnect upgrade kit 1100-423

For use with clean water system

- Opaque bottle
- High Density Polyethylene (HDPE)

Forest Packages
Chairs and Stools
Lights and Monitor Mounts
7000 Series
Delivery Systems
Simplified
Factory Options and Parts
General Information
Equipment Warranty
Radiance Operatory
Imagine + Operatory
Operatory Mobile
Sterilization Centers
Orthodontic Cabinetry
Reception/Front Desk Cabinetry
Color Options
Cabinet Warranty
Compressors
Dry Vacuums
Tanks
Wet Vacuums
Utility Room Accessories
Utility Warranty

Dimensions

Pivot Delivery Systems

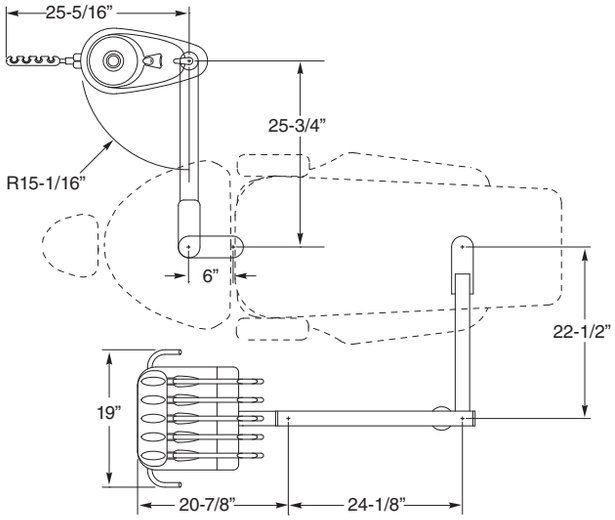

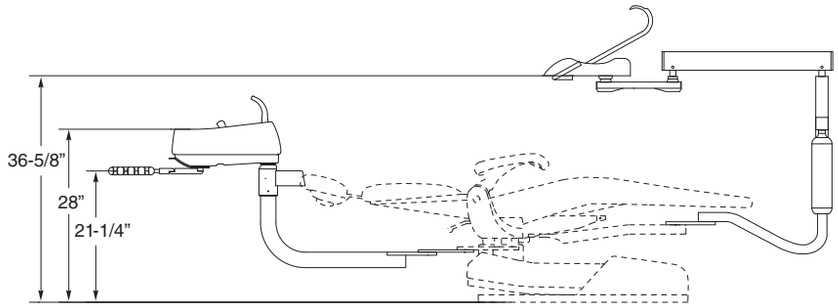

From tip of cuspidor assistant’s holder to end of pivot light post is 120”

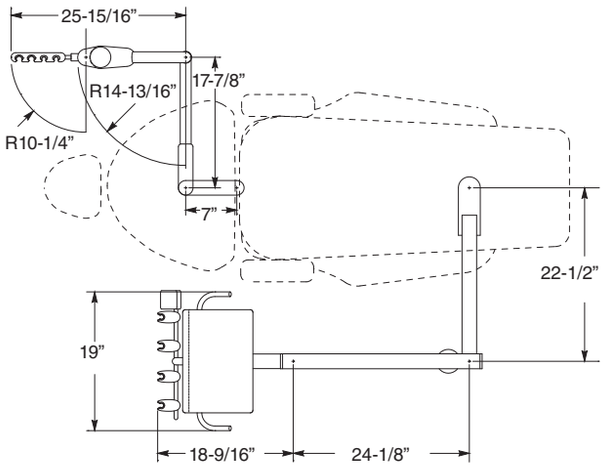

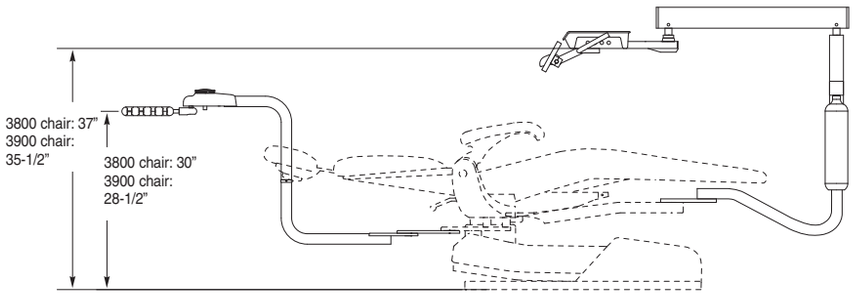

From tip of assistant’s holder to end of pivot light post is 111”

Fixed with Sidebox Delivery Systems

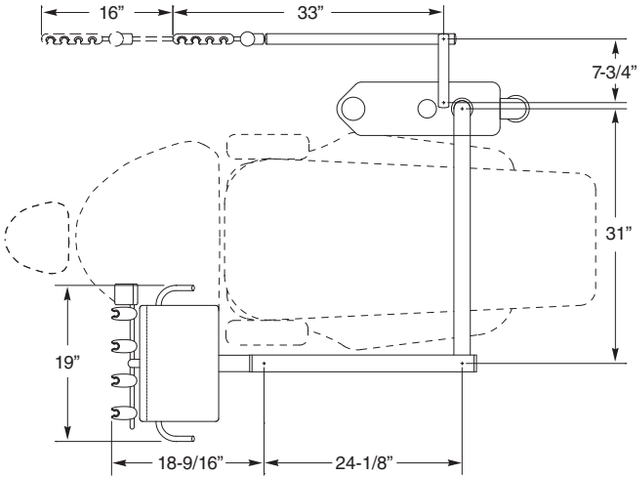

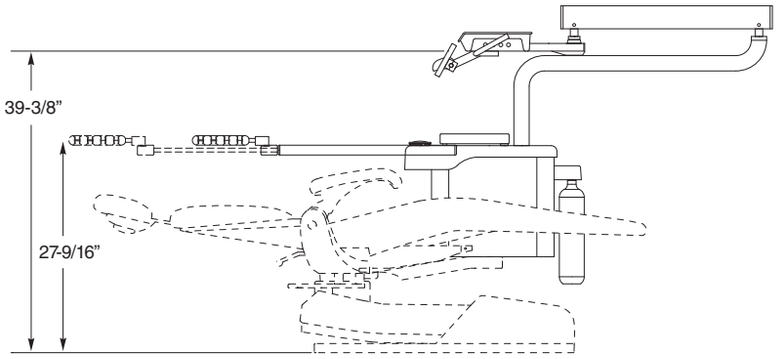

Forest Packages
Chairs and Stools
Lights and Monitor Mounts
7000 Series
Delivery Systems
Simplified
Factory Options and Parts
General Information
Equipment Warranty
Radiance Operatory
Imagine + Operatory
Operatory Mobile
Sterilization Centers
Orthodontic Cabinetry
Reception/Front Desk Cabinetry
Color Options
Cabinet Warranty
Compressors
Dry Vacuums
Tanks
Wet Vacuums
Utility Room Accessories
Utility Warranty

Dimensions

Fixed with Sidebox Delivery Systems

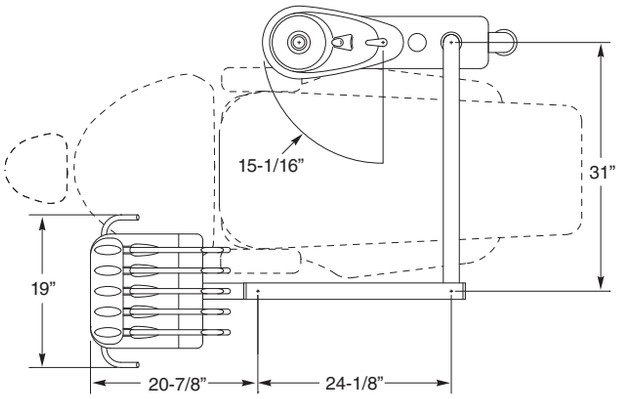

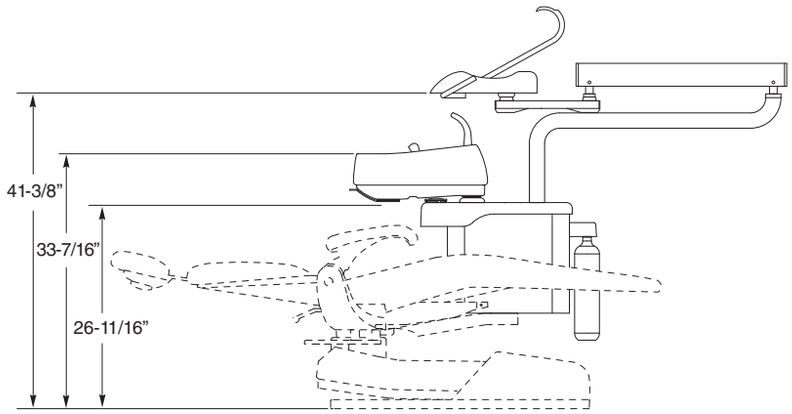

Fixed without Sidebox Delivery Systems

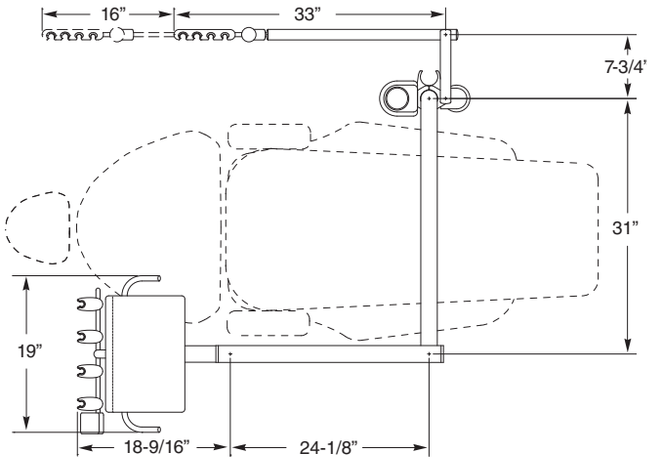

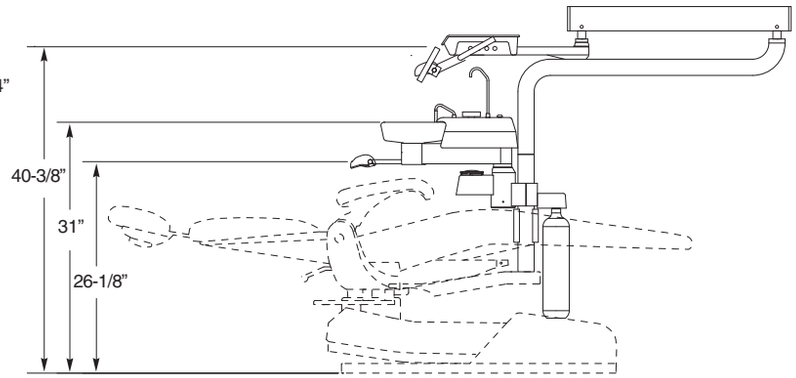

1636/1637 Basic Cuspidor

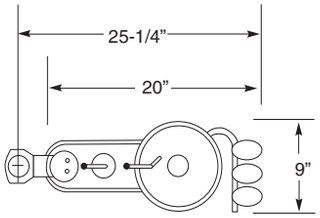

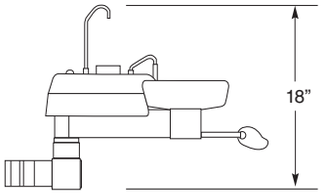

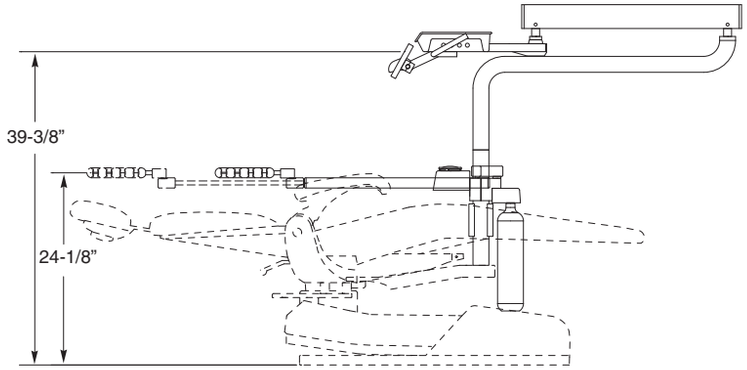

3800 Chair

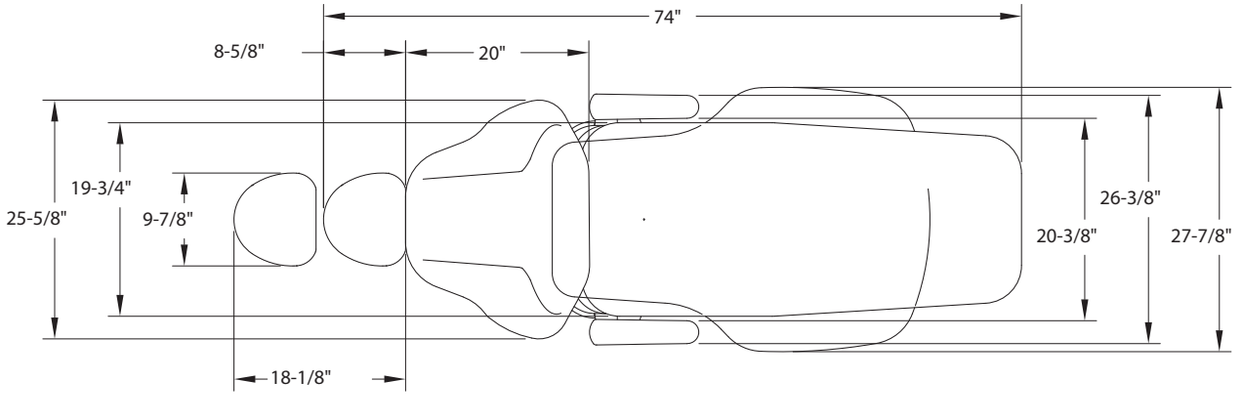

Forest Packages
Chairs and Stools
Lights and Monitor Mounts
7000 Series
Delivery Systems
Simplified
Factory Options and Parts
General Information
Equipment Warranty
Radiance Operatory
Imagine + Operatory
Operatory Mobile
Sterilization Centers
Orthodontic Cabinetry
Reception/Front Desk Cabinetry
Color Options
Cabinet Warranty
Compressors
Dry Vacuums
Tanks
Wet Vacuums
Utility Room Accessories
Utility Warranty

Dimensions

3900 Chair

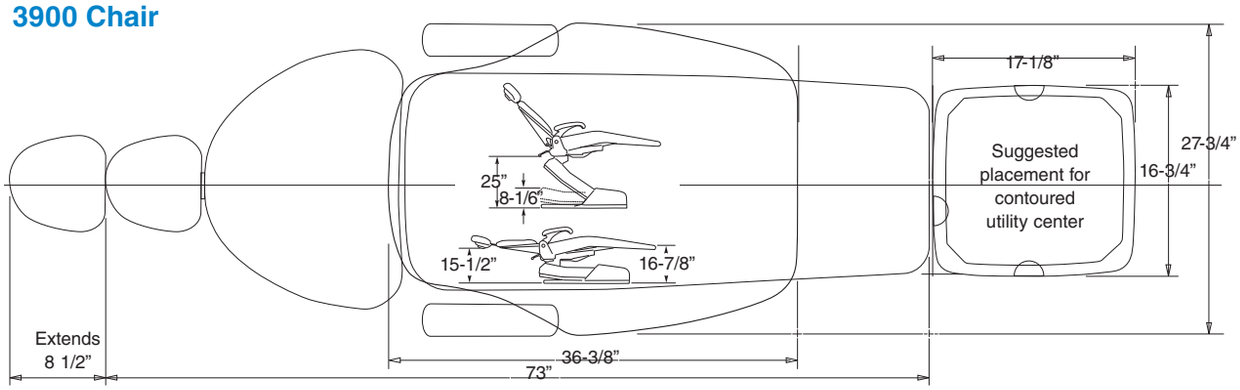

Utility Centers

Contoured

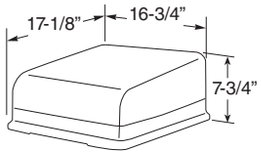

Deluxe Standard Recessed

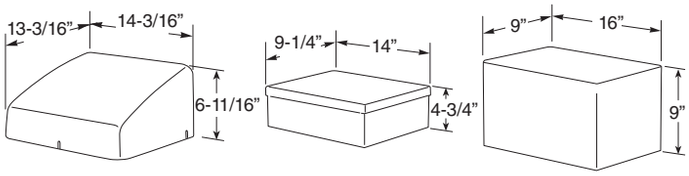

6176 Doctor’s Comfort Stool

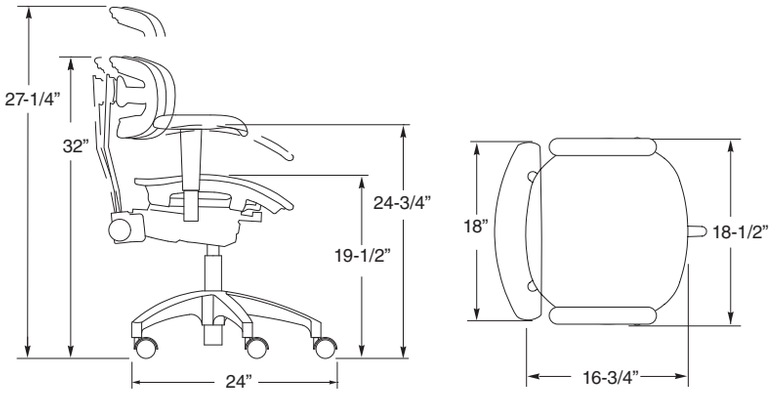

6187 Assistant’s Comfort Stool

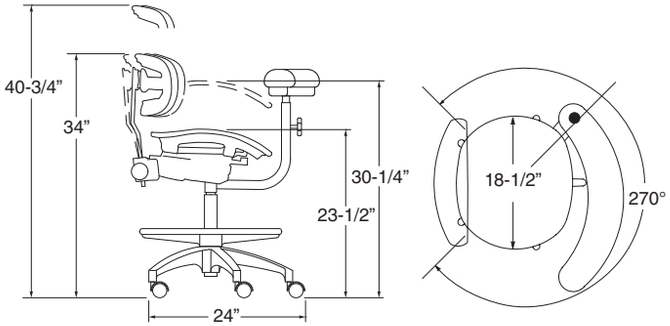

6159C Doctor’s Deluxe Stool

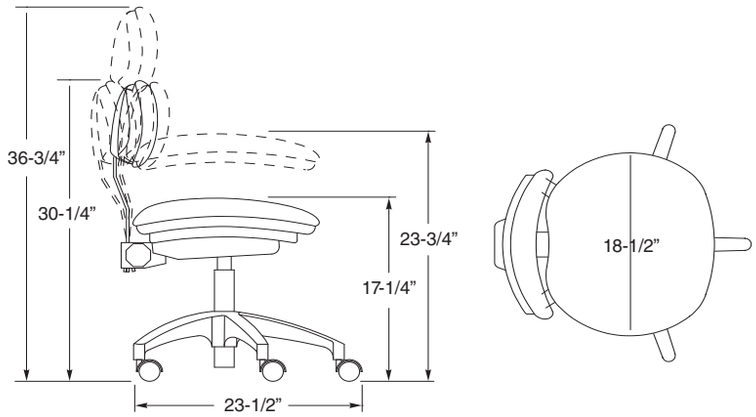

6160C/6161C Assistant’s Deluxe Stool

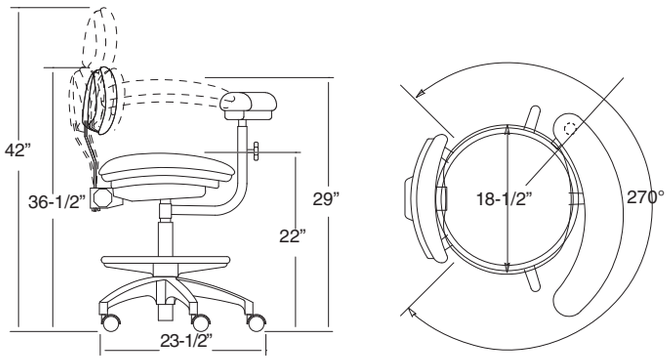

6156C Doctor’s Economy Stool

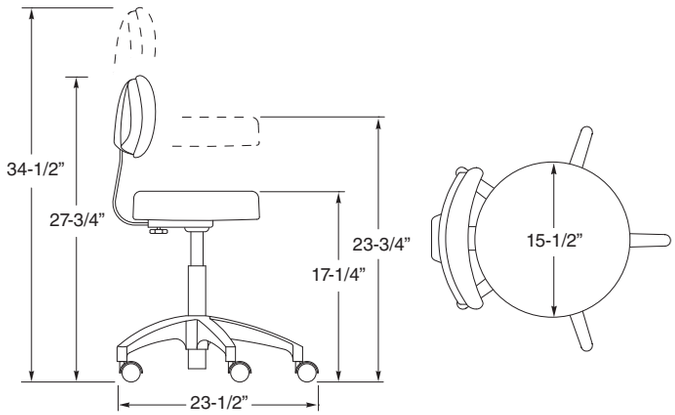

6157C Assistant’s Economy Stool

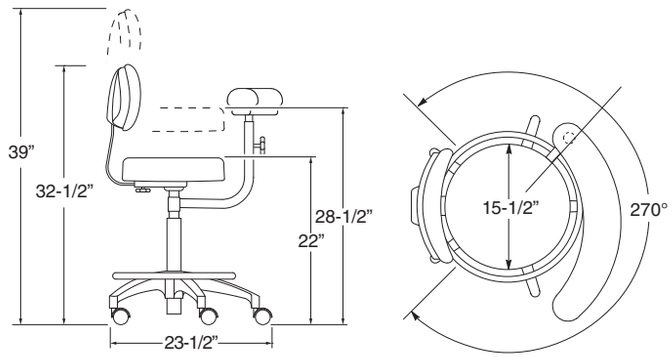

Forest Packages
Chairs and Stools
Lights and Monitor Mounts
7000 Series
Delivery Systems
Simplified
Factory Options and Parts
General Information
Equipment Warranty
Radiance Operatory
Imagine + Operatory
Operatory Mobile
Sterilization Centers
Orthodontic Cabinetry
Reception/Front Desk Cabinetry
Color Options
Cabinet Warranty
Compressors
Dry Vacuums
Tanks
Wet Vacuums
Utility Room Accessories
Utility Warranty

Dimensions

Chair-Mounted Light

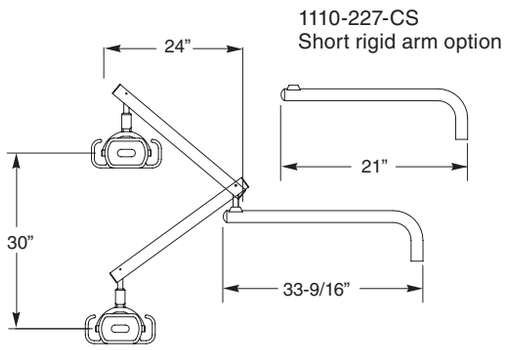

Ceiling-Mounted Light

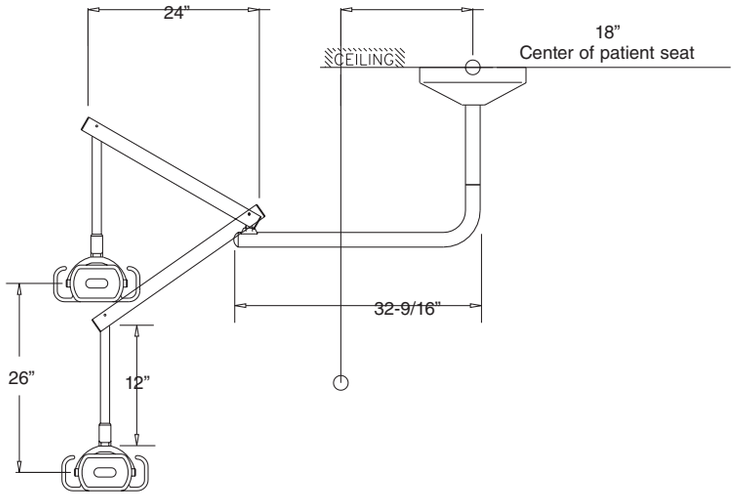

Track Mount Light/Monitor

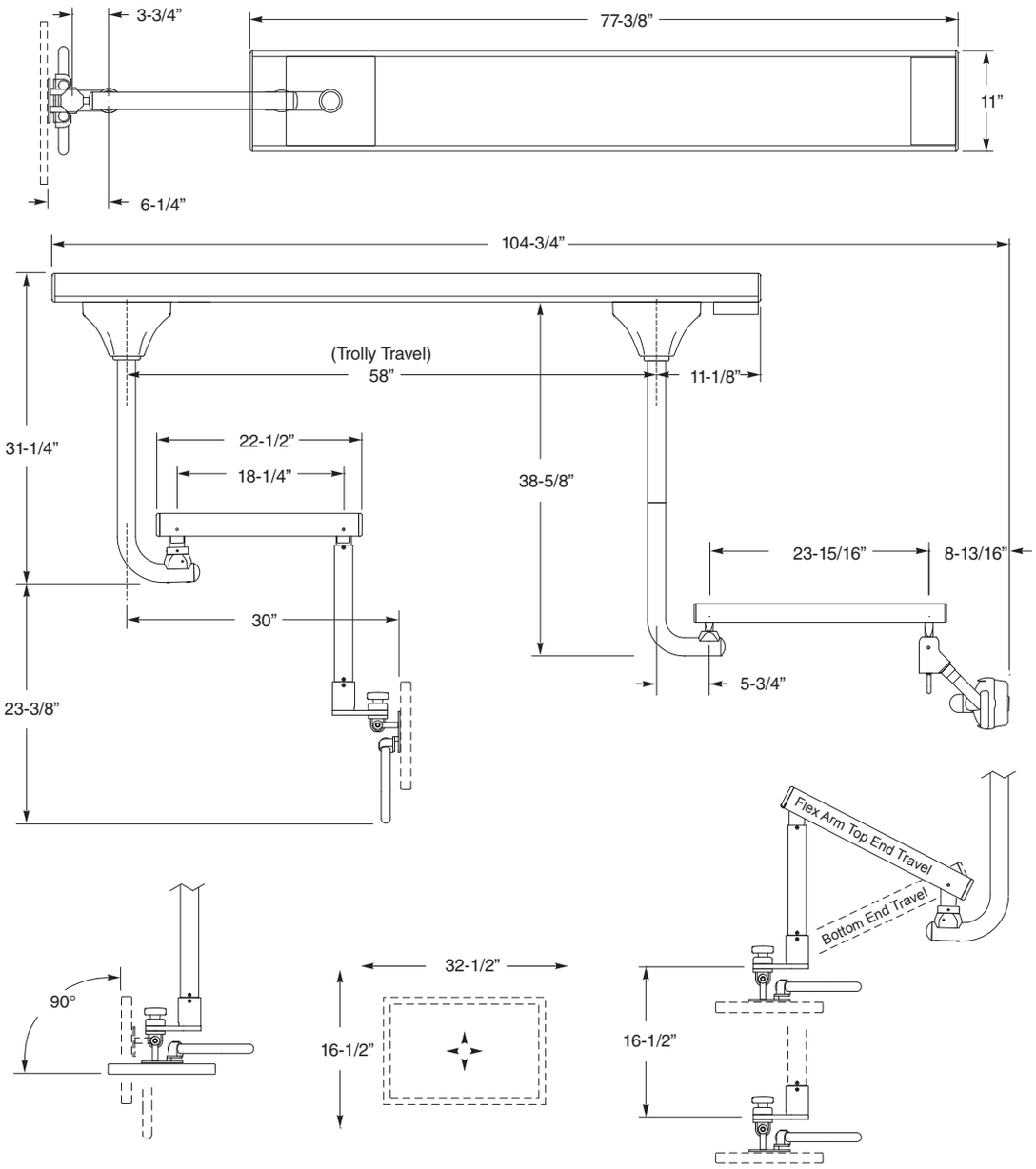

Forest Packages
Chairs and Stools
Lights and Monitor Mounts
7000 Series
Delivery Systems
Simplified
Factory Options and Parts
General Information
Equipment Warranty
Radiance Operatory
Imagine + Operatory
Operatory Mobile
Sterilization Centers
Orthodontic Cabinetry
Reception/Front Desk Cabinetry
Color Options
Cabinet Warranty
Compressors
Dry Vacuums
Tanks
Wet Vacuums
Utility Room Accessories
Utility Warranty

Dimensions

Standard & Tall Wall & Cabinet Mounted Light

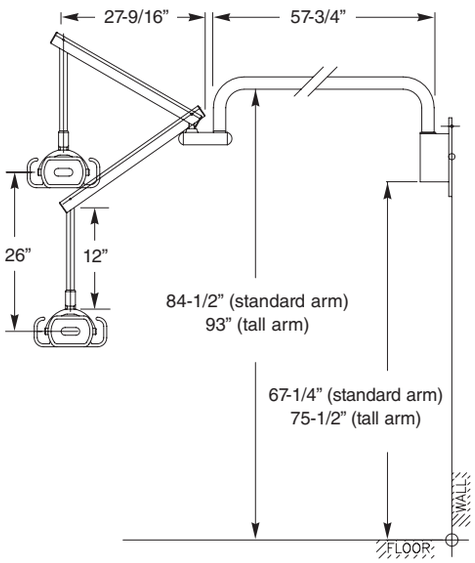

Tall Wall & Cabinet Mounted Light

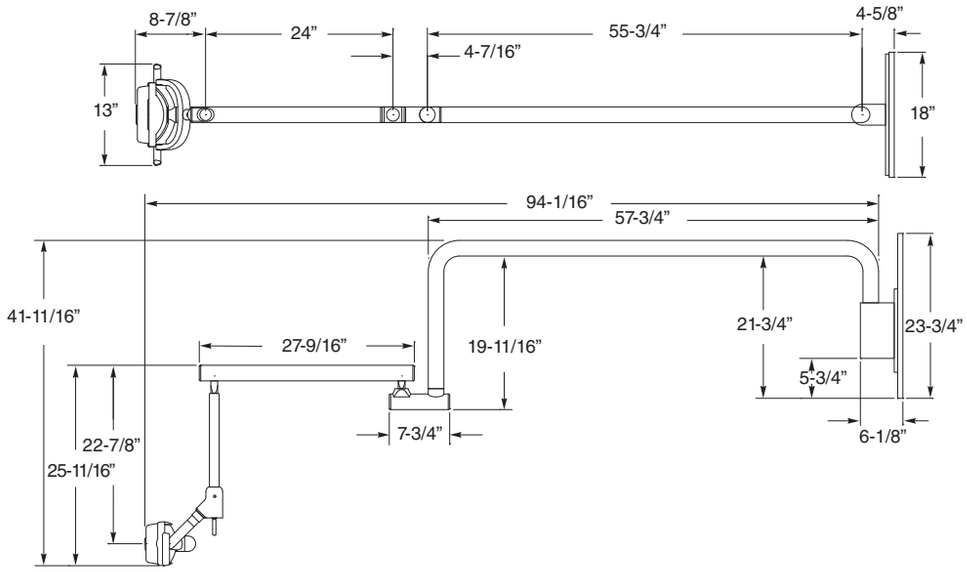

Wall & Cabinet Mount

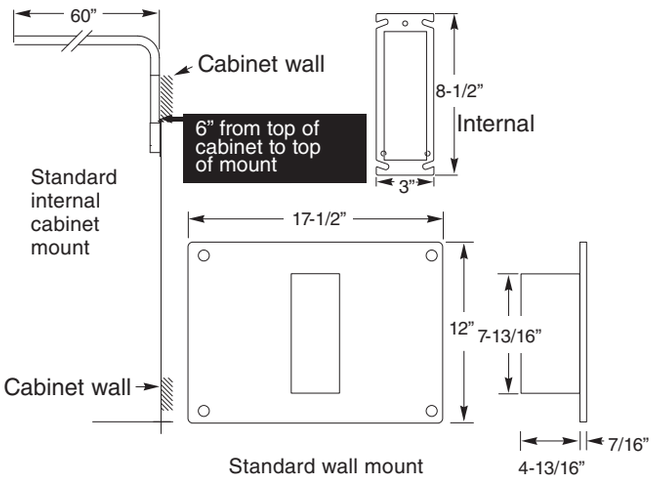

Standard wall mount

Optional Cabinet Mount

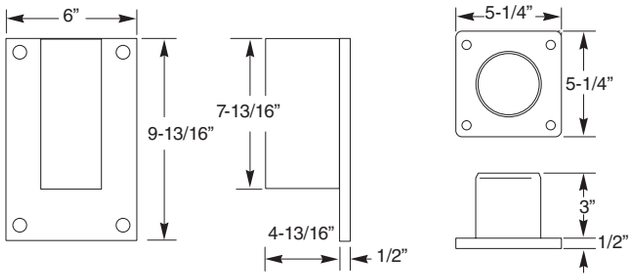

1110-886-CS
Vertical Exterior

1110-881-CS
Horizontal Top

1300RM

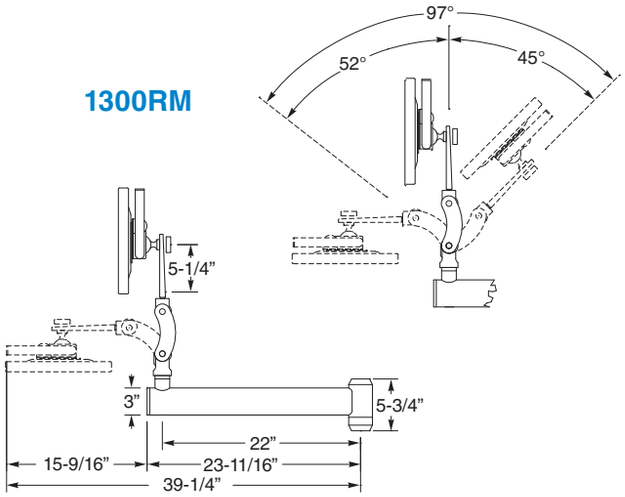

1300TPM

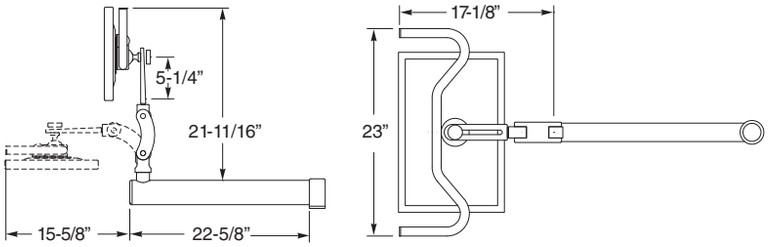

Forest Packages
Chairs and Stools
Lights and Monitor Mounts
7000 Series
Delivery Systems
Simplified
Factory Options and Parts
General Information
Equipment Warranty
Radiance Operatory
Imagine + Operatory
Operatory Mobile
Sterilization Centers
Orthodontic Cabinetry
Reception/Front Desk Cabinetry
Color Options
Cabinet Warranty
Compressors
Dry Vacuums
Tanks
Wet Vacuums
Utility Room Accessories
Utility Warranty

Dimensions

7020PRO-BC Beneath Counter

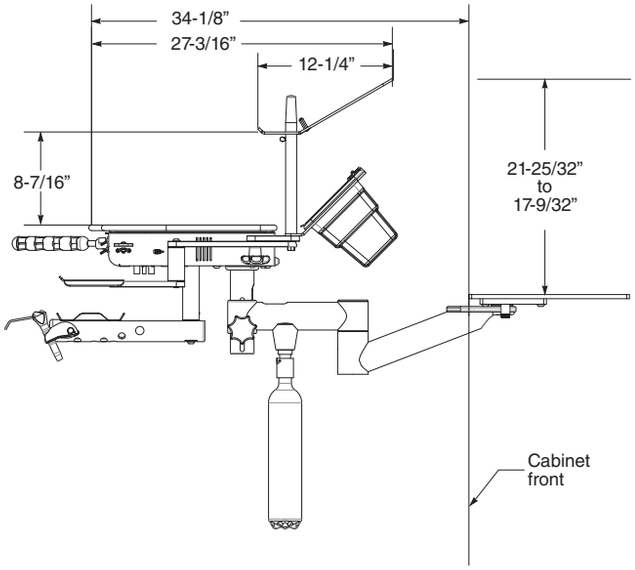

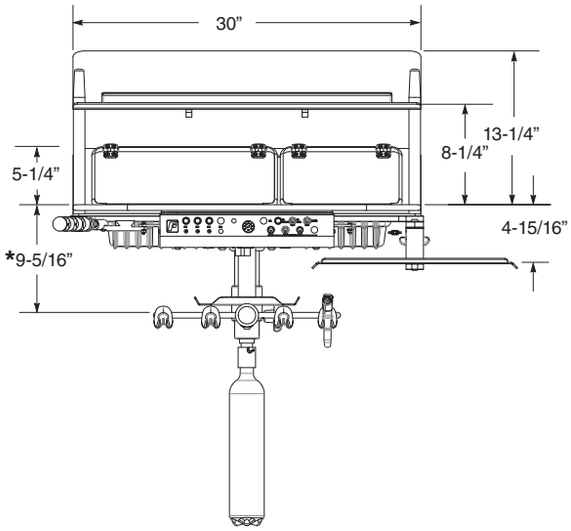

7021PRO-BC Beneath Counter

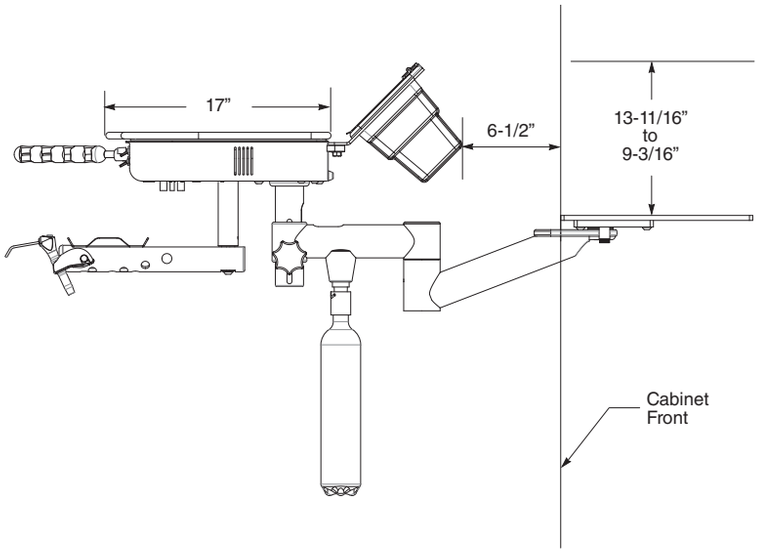

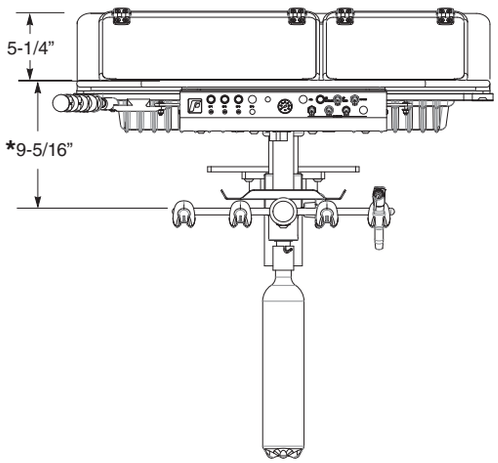

- Large contoured work surface standard for 7020/7021
- Work surface 9/16” thick
- Shown with organization features
- Height adjustable work surface, 5”

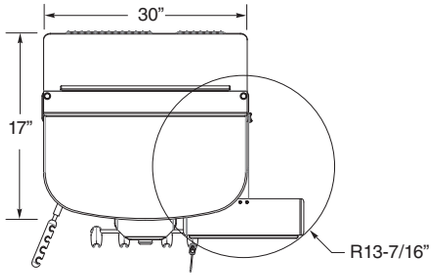

0010-086

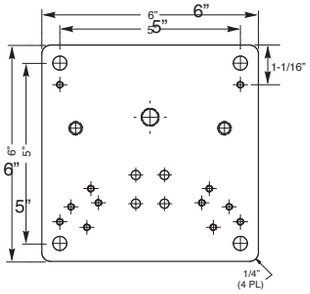

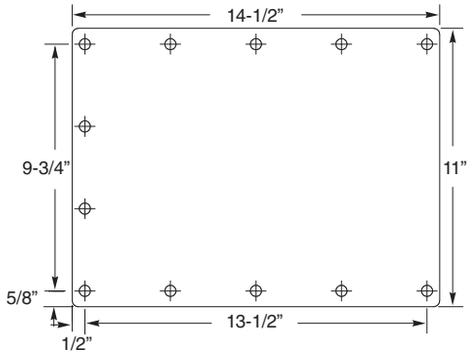

7020/7021PRO-BC Mounting Plates

Forest Packages
Chairs and Stools
Lights and Monitor Mounts
7000 Series
Delivery Systems
Simplified
Factory Options and Parts
General Information
Equipment Warranty
Radiance Operatory
Imagine + Operatory
Operatory Mobile
Sterilization Centers
Orthodontic Cabinetry
Reception/Front Desk Cabinetry
Color Options
Cabinet Warranty
Compressors
Dry Vacuums
Tanks
Wet Vacuums
Utility Room Accessories
Utility Warranty

Dimensions

7020PRO-WM Wall Mount

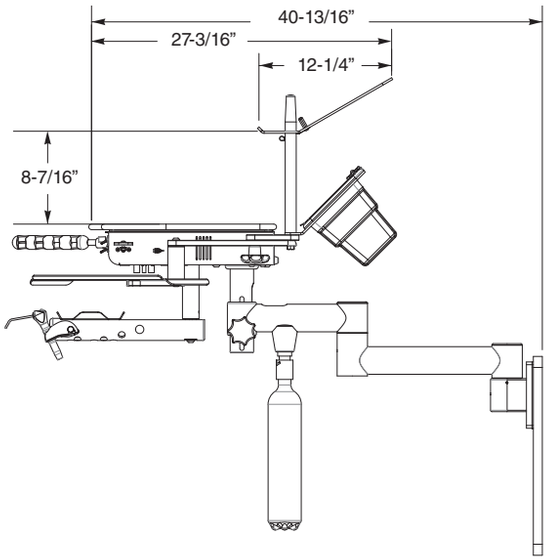

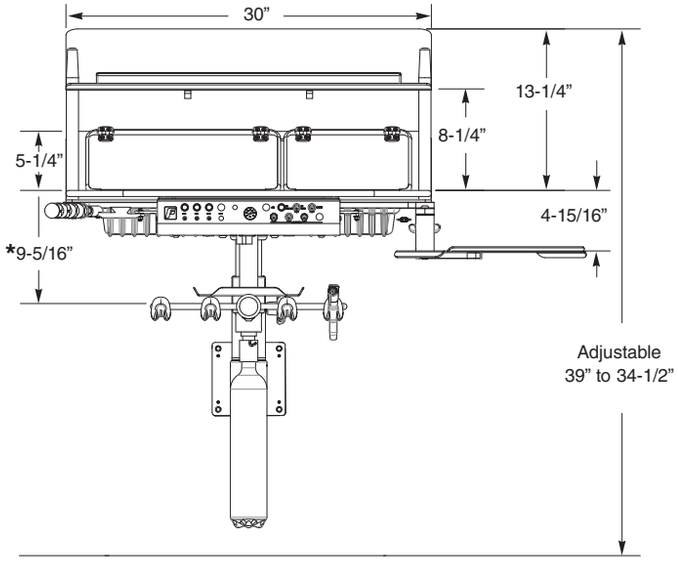

7021PRO-WM Wall Mount

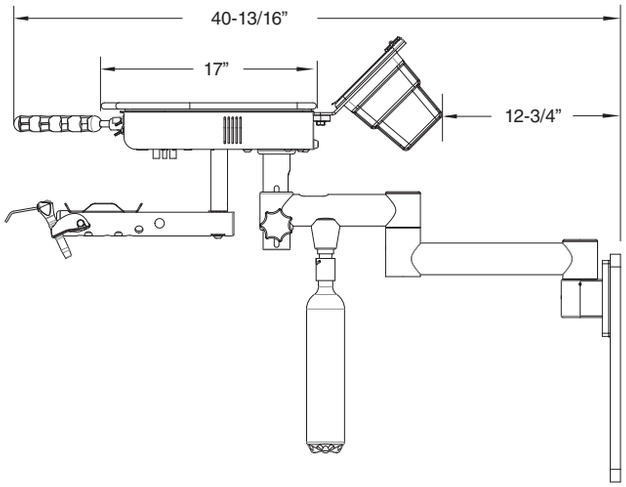

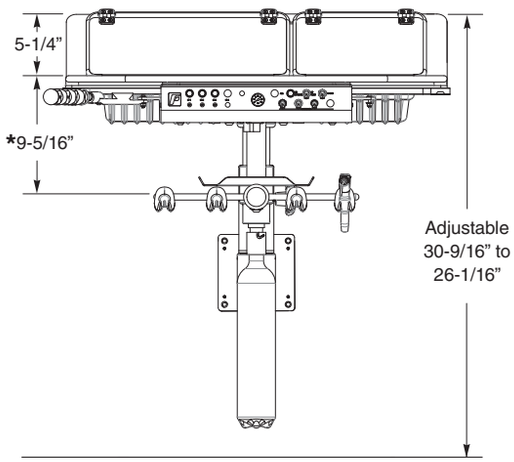

- Large contoured work surface standard for 7020/7021
- Work surface 9/16” thick
- Shown with organization features
- Height adjustable work surface, 5”

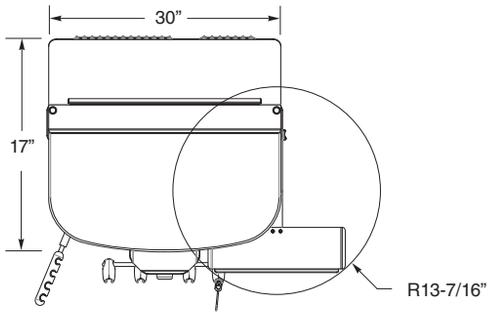

7020/7021 WM Mounting Plate

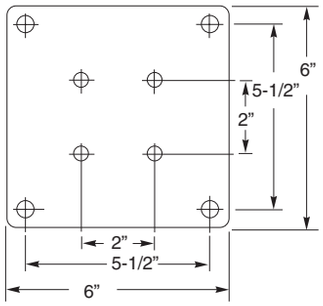

7020/7021 WM Leveling Mounting Board

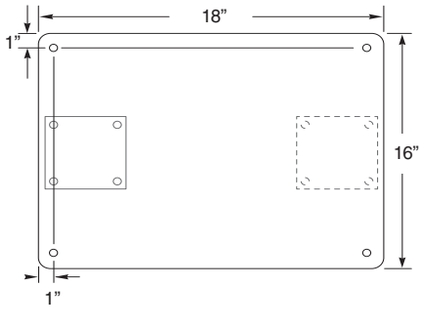

Forest Packages
Chairs and Stools
Lights and Monitor Mounts
7000 Series
Delivery Systems
Simplified
Factory Options and Parts
General Information
Equipment Warranty
Radiance Operatory
Imagine + Operatory
Operatory Mobile
Sterilization Centers
Orthodontic Cabinetry
Reception/Front Desk Cabinetry
Color Options
Cabinet Warranty
Compressors
Dry Vacuums
Tanks
Wet Vacuums
Utility Room Accessories
Utility Warranty

Dimensions

7020PRO-UC Under Cabinet Floor Mount

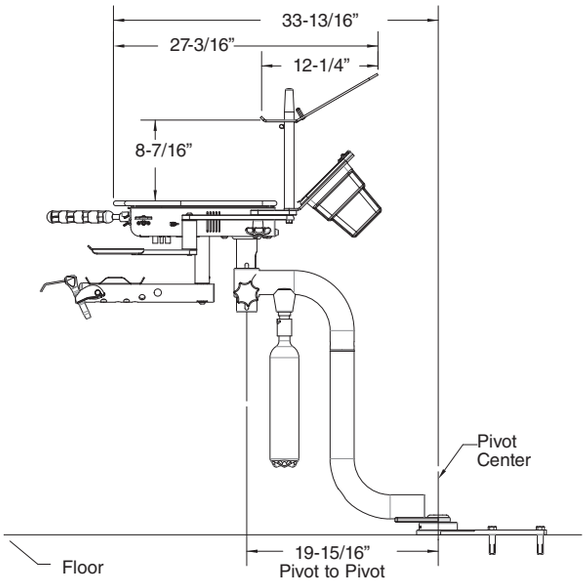

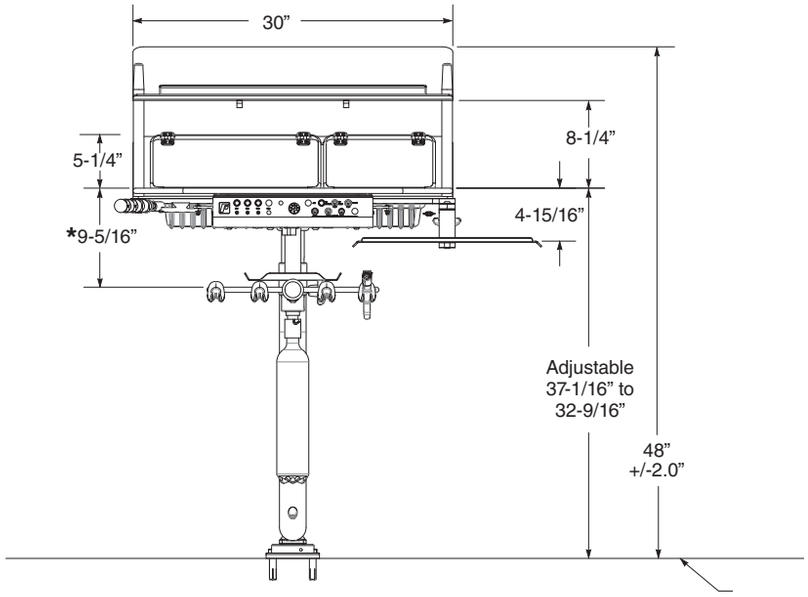

7021PRO-UC Under Cabinet Floor Mount

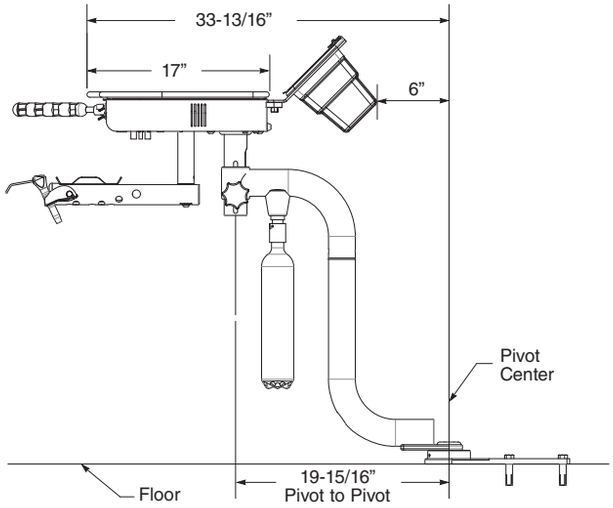

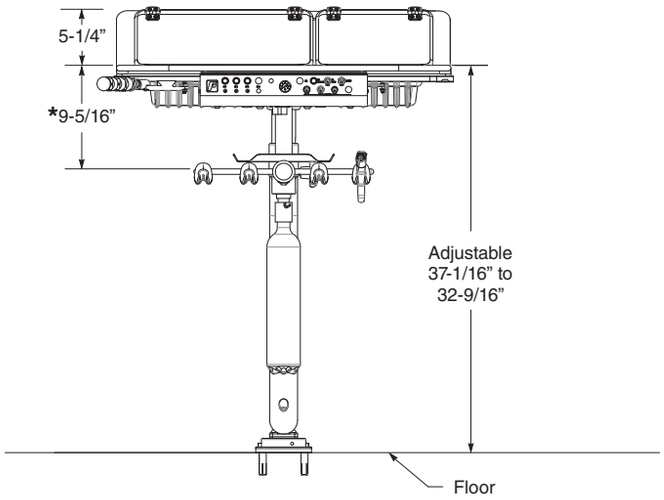

- Large contoured work surface standard for 7020/7021
- Work surface 9/16” thick
- Shown with organization features
- Height adjustable work surface, 5”

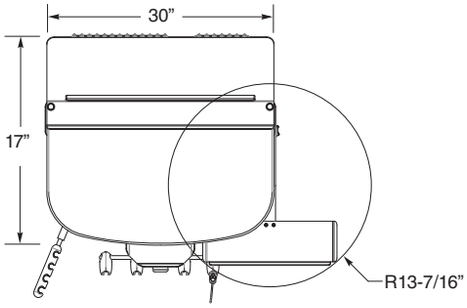

7020/7021PRO-UC Under Cabinet Floor Mount Leveling/Mounting Plate

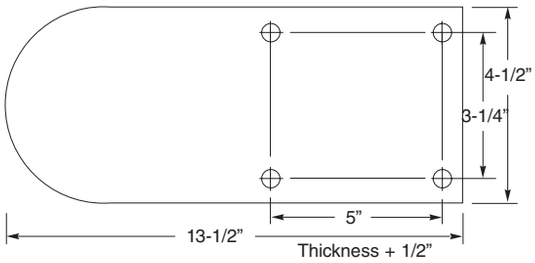

1300-025-CS Monitor Assembly Option

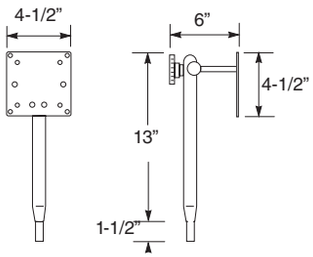

Forest Packages
Chairs and Stools
Lights and Monitor Mounts
7000 Series
Delivery Systems
Simplified
Factory Options and Parts
General Information
Equipment Warranty
Radiance Operatory
Imagine + Operatory
Operatory Mobile
Sterilization Centers
Orthodontic Cabinetry
Reception/Front Desk Cabinetry
Color Options
Cabinet Warranty
Compressors
Dry Vacuums
Tanks
Wet Vacuums
Utility Room Accessories
Utility Warranty

Dimensions

7020PRO-MC Duo Cart

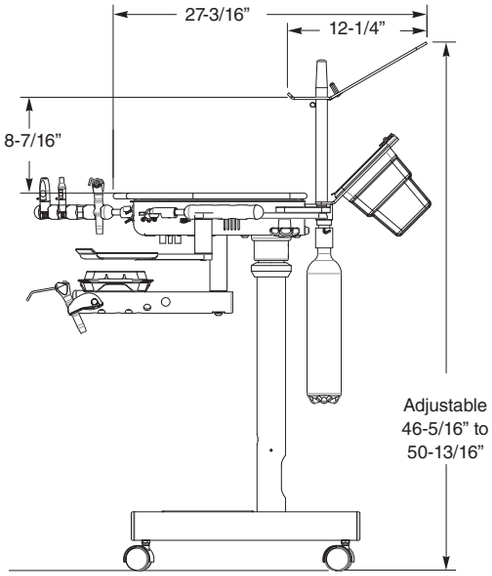

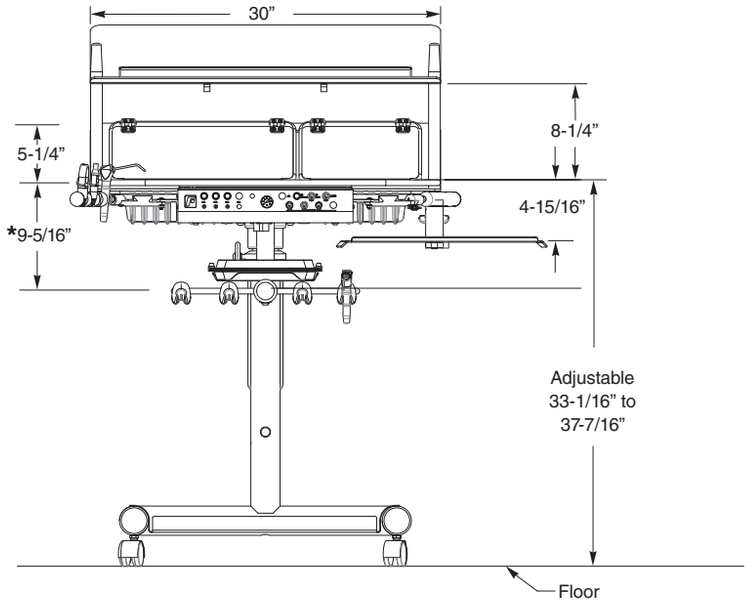

7021PRO-MC Duo Cart

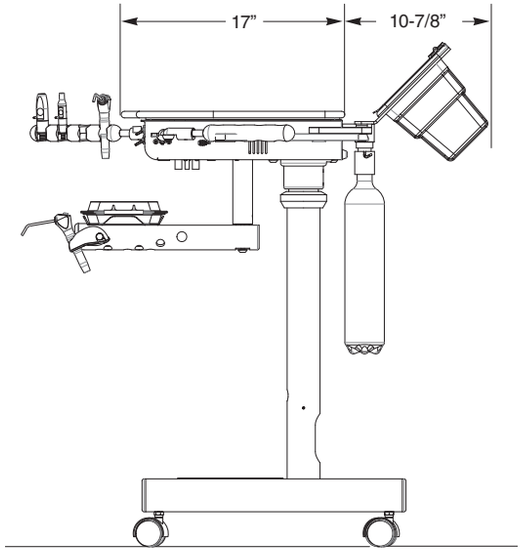

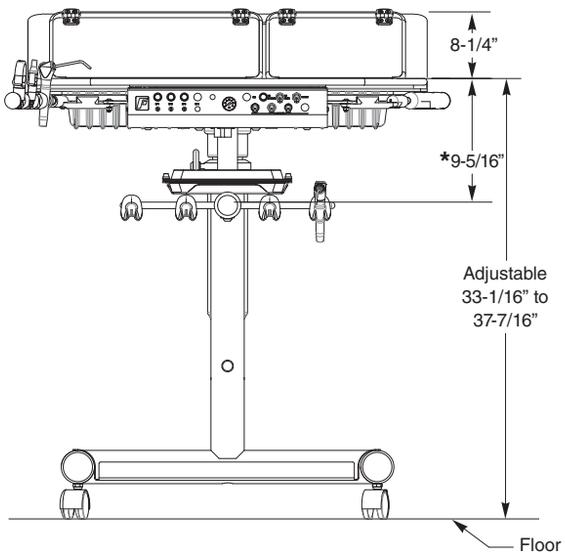

- Large contoured work surface standard for 7020/7021
- Work surface 9/16” thick
- Shown with organization features
- Height adjustable work surface, 5”

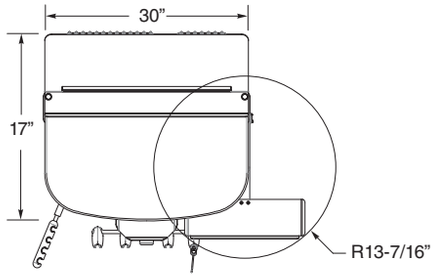

1300-025-CS Monitor Assembly Option

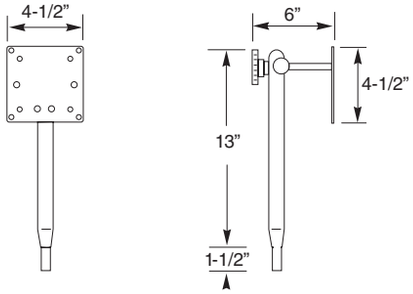

Forest Packages
Chairs and Stools
Lights and Monitor Mounts
7000 Series
Delivery Systems
Simplified
Factory Options and Parts
General Information
Equipment Warranty
Radiance Operatory
Imagine + Operatory
Operatory Mobile
Sterilization Centers
Orthodontic Cabinetry
Reception/Front Desk Cabinetry
Color Options
Cabinet Warranty
Compressors
Dry Vacuums
Tanks
Wet Vacuums
Utility Room Accessories
Utility Warranty

Dimensions

7010BC Beneath Counter

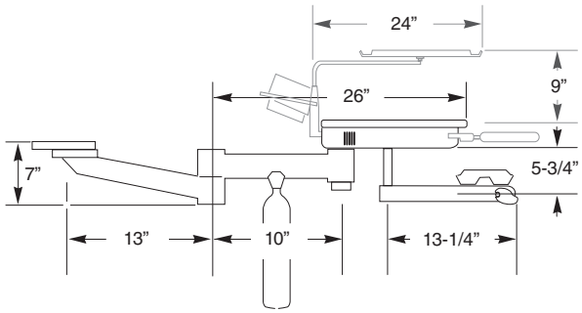

- Work surface 9/16” thick (semi-round), 7010
- Shown with optional storage organizer and swivel tray
- Shown with additional optional asst’s quad holder assembly
- Height adjustable work surface, 5”

7010BC Mounting Plates

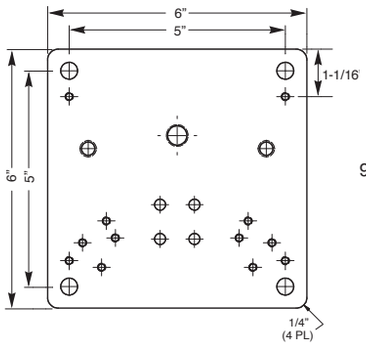

0010-086

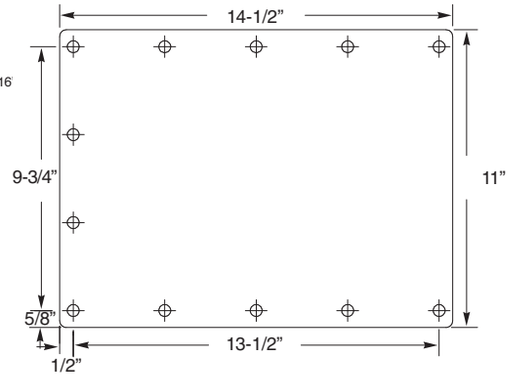

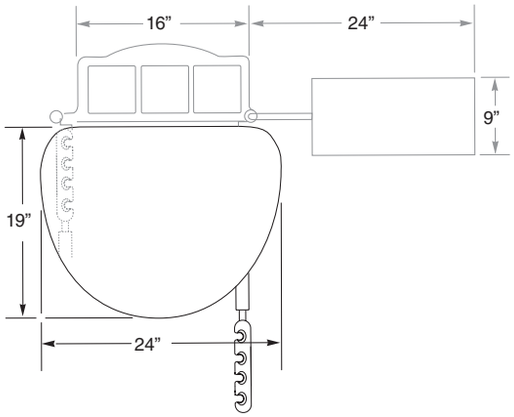

0010-084-CS Option

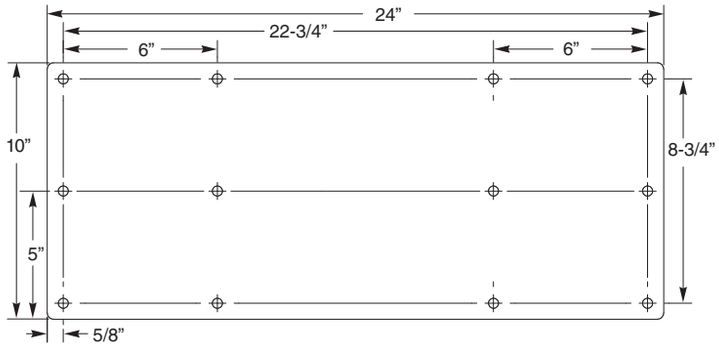

7010WM Mounting Plate

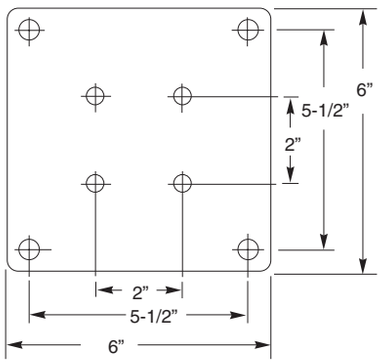

7010WM Leveling/Mounting Board

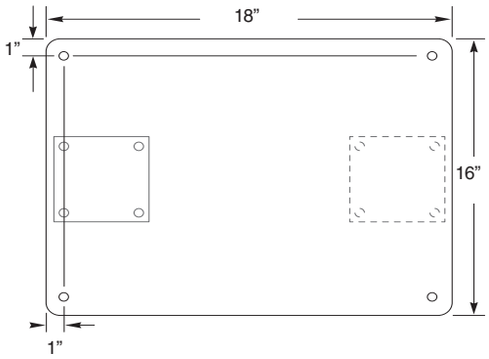

7010WM Wall Mount

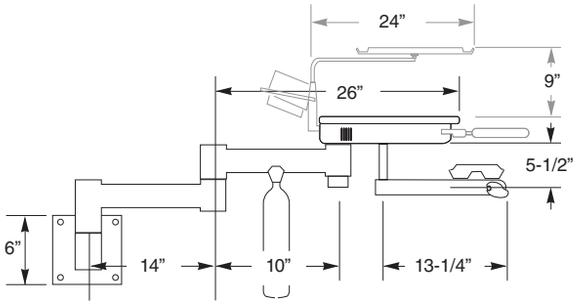

1300-025-CS Monitor Assembly Option

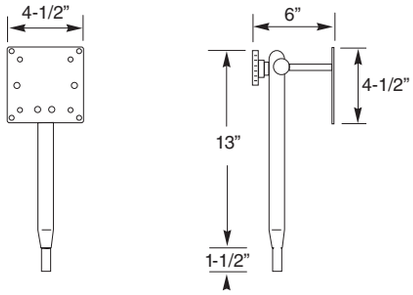

Forest Packages
Chairs and Stools
Lights and Monitor Mounts
7000 Series
Delivery Systems
Simplified
Factory Options and Parts
General Information
Equipment Warranty
Radiance Operatory
Imagine + Operatory
Operatory Mobile
Sterilization Centers
Orthodontic Cabinetry
Reception/Front Desk Cabinetry
Color Options
Cabinet Warranty
Compressors
Dry Vacuums
Tanks
Wet Vacuums
Utility Room Accessories
Utility Warranty

Dimensions

- Work surface 9/16” thick (semi-round), 7010
- Shown with optional storage organizer and swivel tray
- Shown with additional optional asst’s quad holder assembly
- Height adjustable work surface, 5”

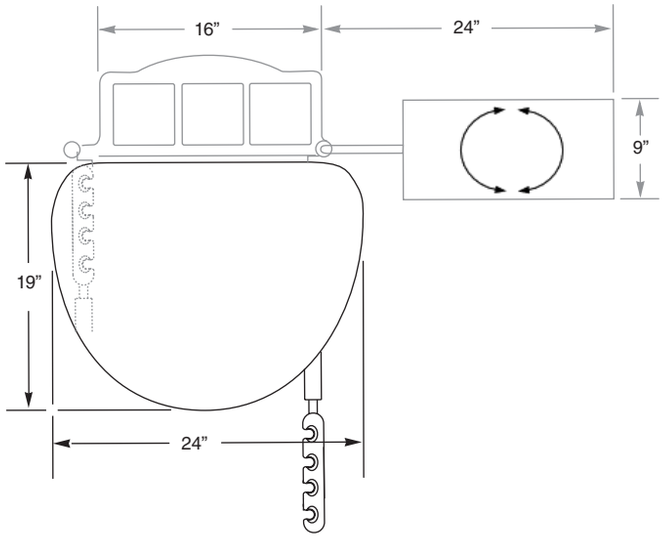

1300-025-CS Monitor Assembly Option

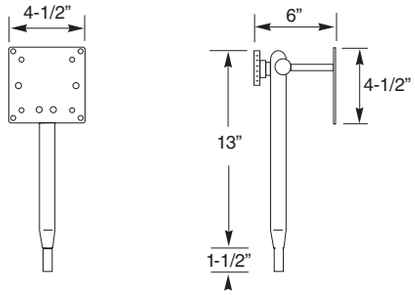

7010UC Under Cabinet Floor Mount

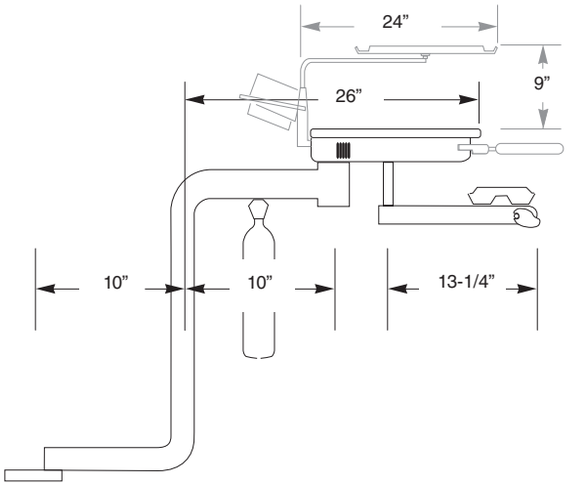

7010UC Under Cabinet Floor Mount Leveling/Mounting Plate

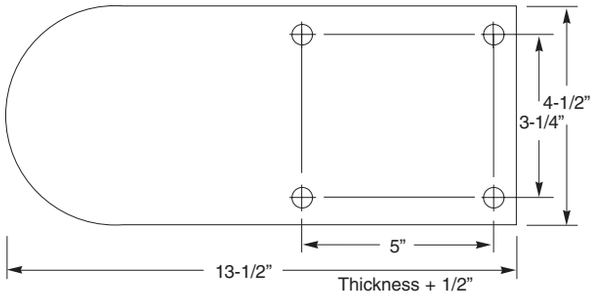

7010MC Duo Cart

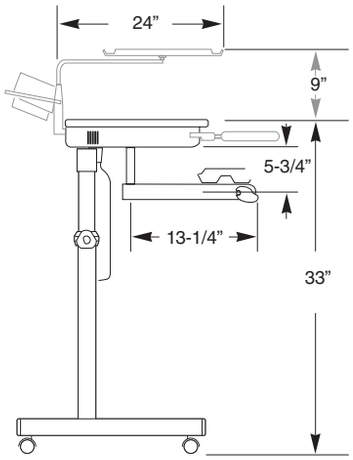

Forest Packages
Chairs and Stools
Lights and Monitor Mounts
7000 Series
Delivery Systems
Simplified
Factory Options and Parts
General Information
Equipment Warranty
Radiance Operatory
Imagine + Operatory
Operatory Mobile
Sterilization Centers
Orthodontic Cabinetry
Reception/Front Desk Cabinetry
Color Options
Cabinet Warranty
Compressors
Dry Vacuums
Tanks
Wet Vacuums
Utility Room Accessories
Utility Warranty

Dimensions

3486BC and WM Rear Beneath Counter Mount

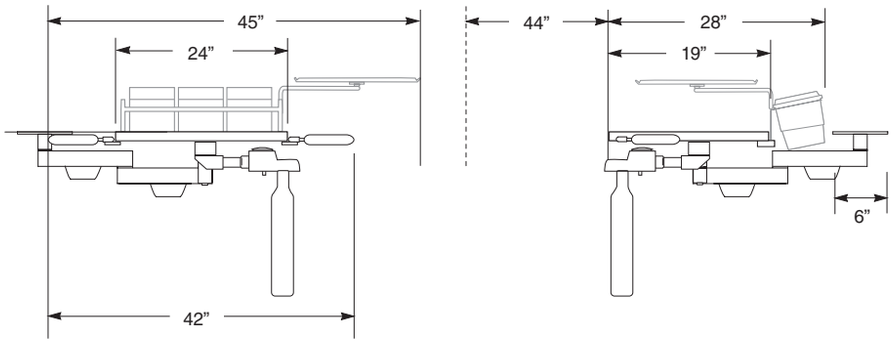

3486BC Heavy Duty Mounting Plate

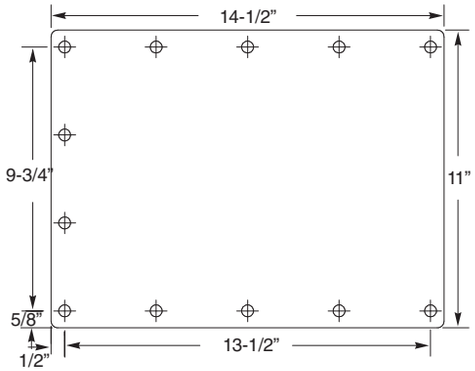

3486WM Wall Mount Hub

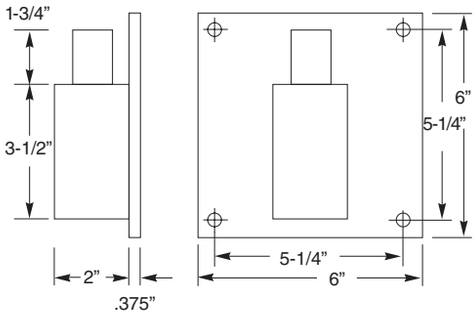

3486WM Leveling/Mounting Board

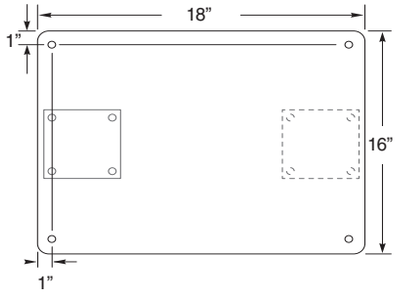

3486BC and WM Mounting Arm

Note: Arms can be reversed on the beneath counter and wall mount to adjust work surface height.

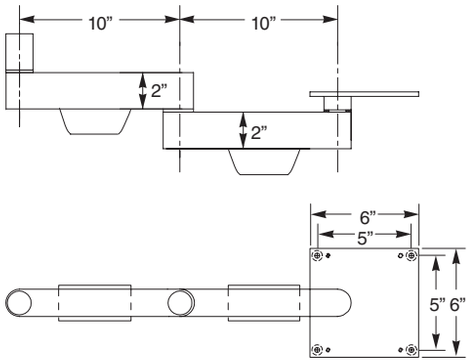

- Semi-round work surface standard for 2184BC/2186BC/3486
- Work surface 9/16” thick (semi-round and rectangular)
- Shown with optional storage organizer and swivel tray
- Shown with additional optional asst’s quad holder assembly

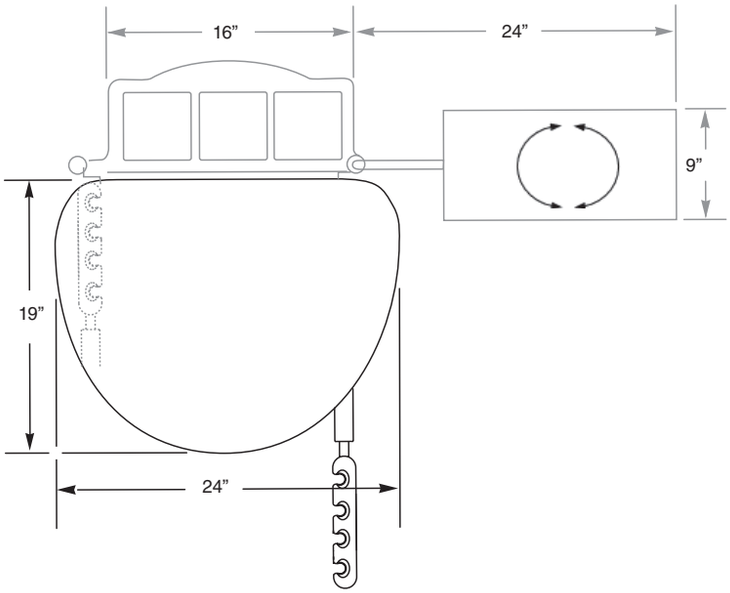

3486MC Mobile Cart

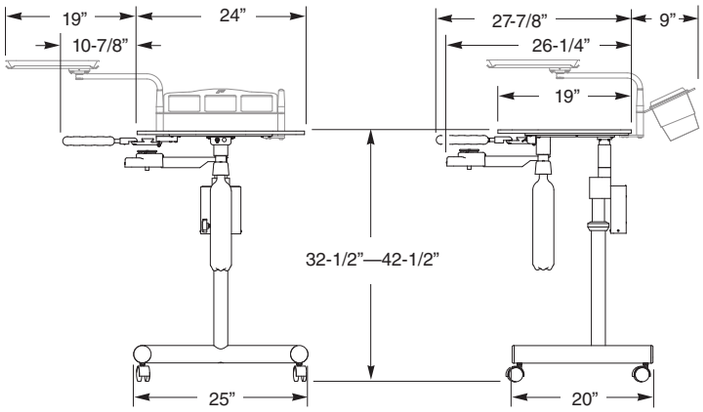

Forest Packages
Chairs and Stools
Lights and Monitor Mounts
7000 Series
Delivery Systems
Simplified
Factory Options and Parts
General Information
Equipment Warranty
Radiance Operatory
Imagine + Operatory
Operatory Mobile
Sterilization Centers
Orthodontic Cabinetry
Reception/Front Desk Cabinetry
Color Options
Cabinet Warranty
Compressors
Dry Vacuums
Tanks
Wet Vacuums
Utility Room Accessories
Utility Warranty

Dimensions

3486UC Under Cabinet Floor Mount Assistant's

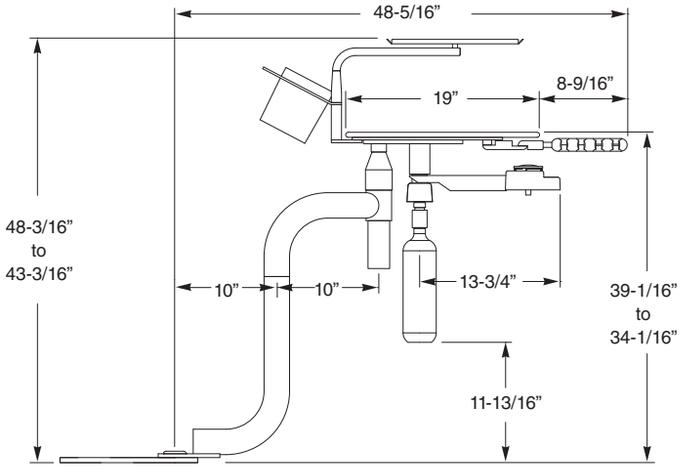

- Semi-round work surface standard for 2184BC/2186BC/3486
- Work surface 9/16” thick (semi-round and rectangular)
- Shown with optional storage organizer and swivel tray
- Shown with additional optional asst's quad holder assembly

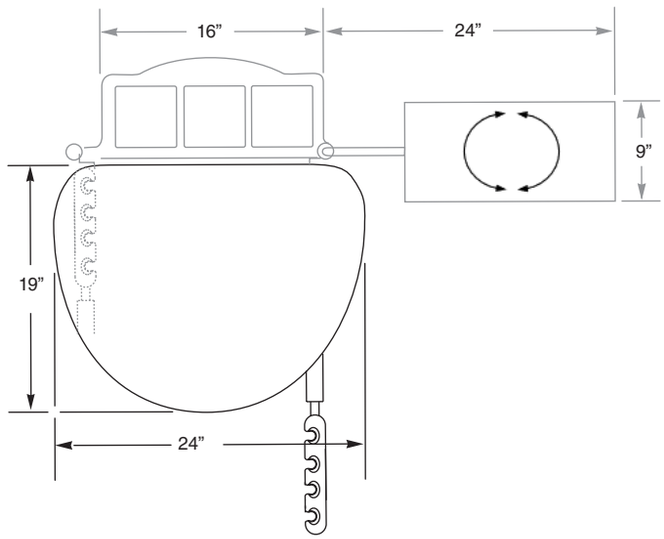

2184 Rear Beneath Work Surface Duo Unit

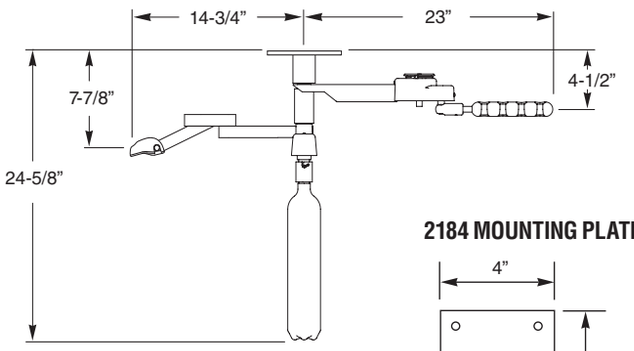

2184 MOUNTING PLATE

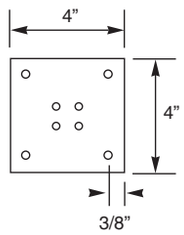

3486UC Under Cabinet Floor Mount Leveling/Mounting Plate

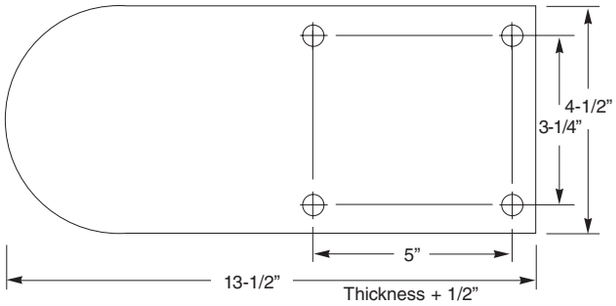

1300-025-CS Monitor Assembly Option

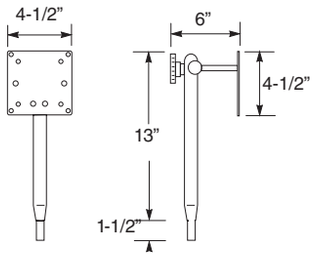

2184/2500 Wall Cut-Out

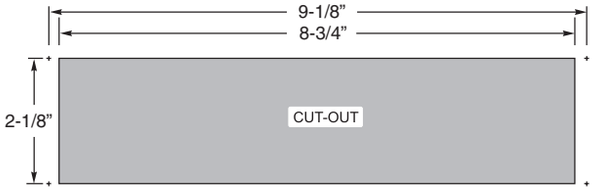

1700-142 SLIDE MOUNT OPTION, 1284/2184

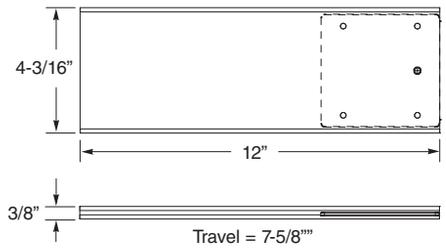

Forest Packages
Chairs and Stools
Lights and Monitor Mounts
7000 Series
Delivery Systems
Simplified
Factory Options and Parts
General Information
Equipment Warranty
Radiance Operatory
Imagine + Operatory
Operatory Mobile
Sterilization Centers
Orthodontic Cabinetry
Reception/Front Desk Cabinetry
Color Options
Cabinet Warranty
Compressors
Dry Vacuums
Tanks
Wet Vacuums
Utility Room Accessories
Utility Warranty

Dimensions

2186 Rear Beneath Work Surface Duo Unit

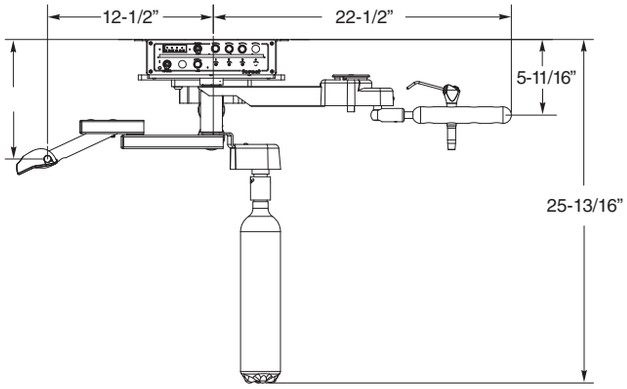

2186 Control Mounting

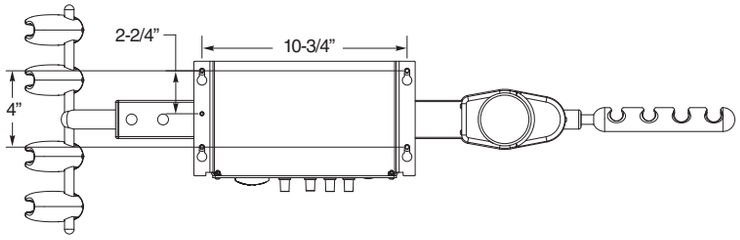

2184BC Beneath Counter Duo Unit

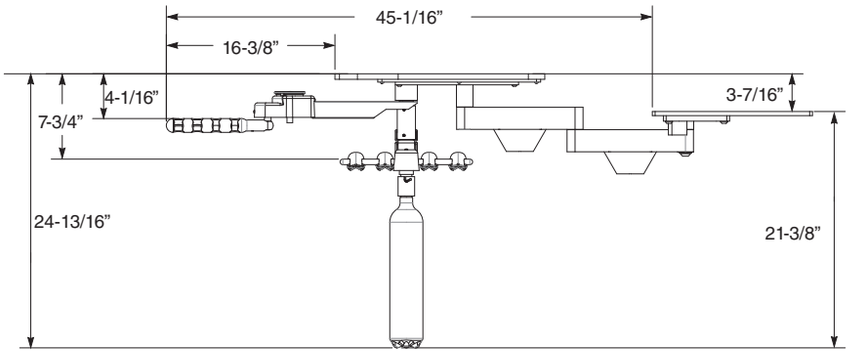

2184BC/2186BC Beneath Counter Duo Unit

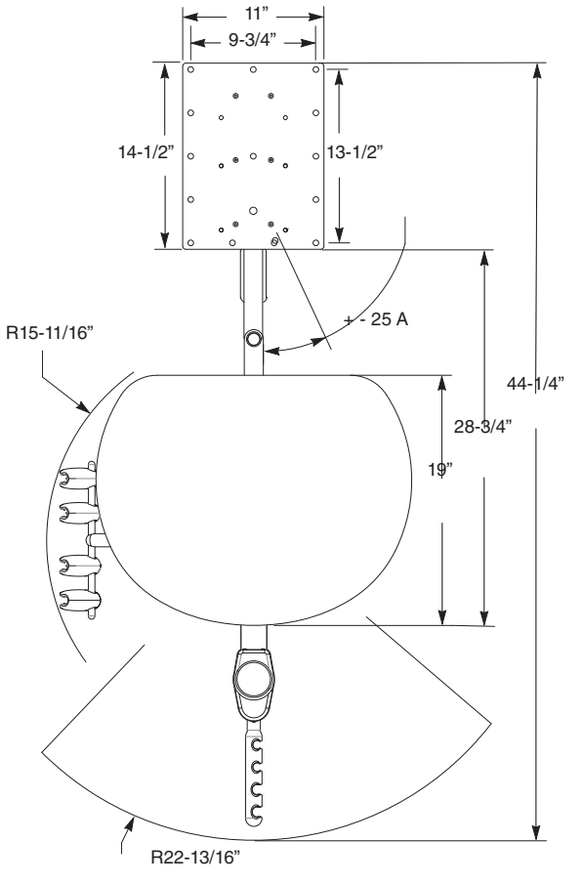

2186BC Rear Beneath Counter Duo Unit

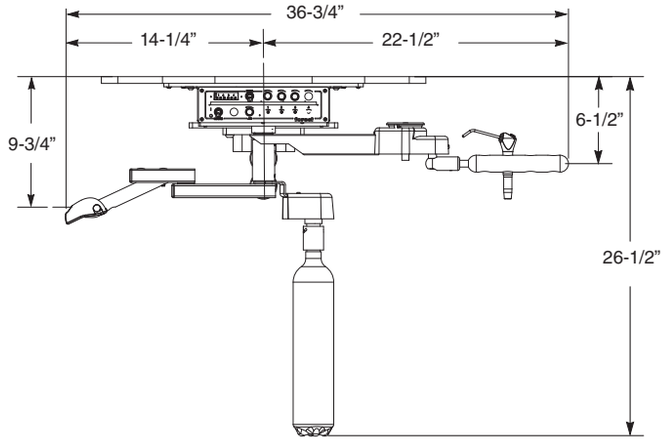

2500 PANEL MOUNT

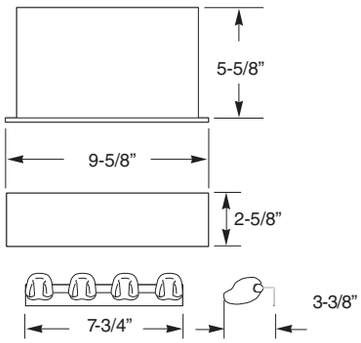

2520 PANEL MOUNT

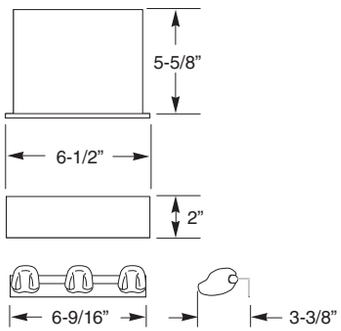

2520 Wall Cut-Out

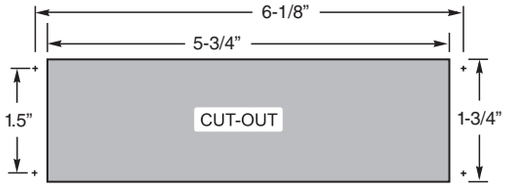

Forest Packages
Chairs and Stools
Lights and Monitor Mounts
7000 Series
Delivery Systems
Simplified
Factory Options and Parts
General Information
Equipment Warranty
Radiance Operatory
Imagine + Operatory
Operatory Mobile
Sterilization Centers
Orthodontic Cabinetry
Reception/Front Desk Cabinetry
Color Options
Cabinet Warranty
Compressors
Dry Vacuums
Tanks
Wet Vacuums
Utility Room Accessories
Utility Warranty

Dimensions

3235 Cabinet Side Delivery

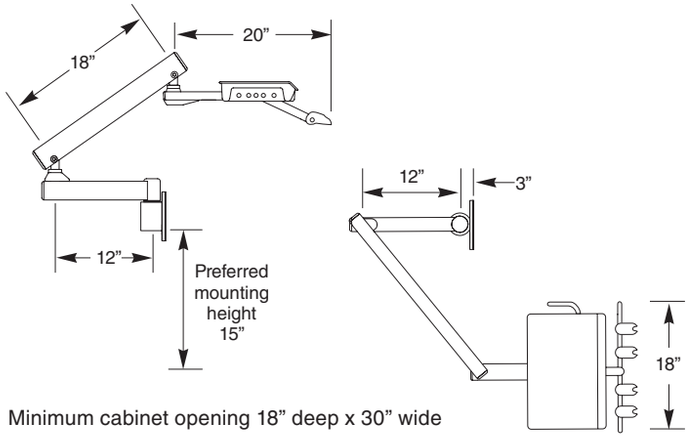

Minimum cabinet opening 18” deep x 30” wide

3230 Wall Side Delivery

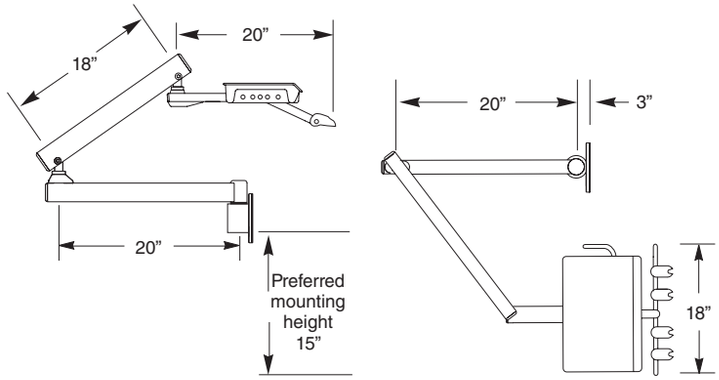

2400 Rear Mount Beneath Counter

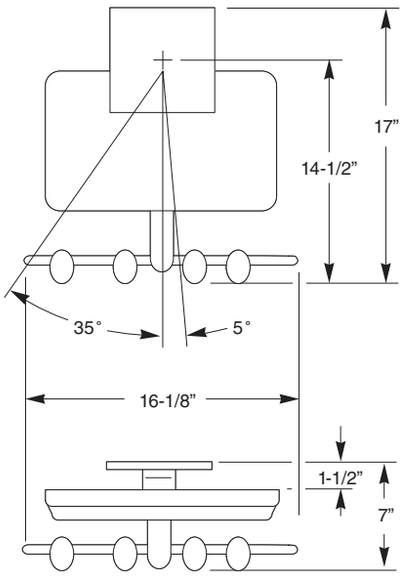

2400 Mounting Plate

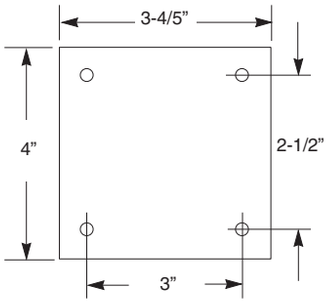

1110-115-CS Folding Arm System Option

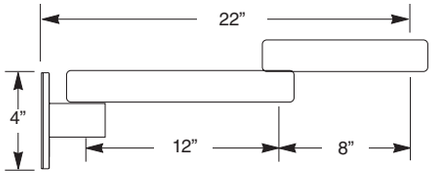

3230/3235 Leveling Mounting Plate

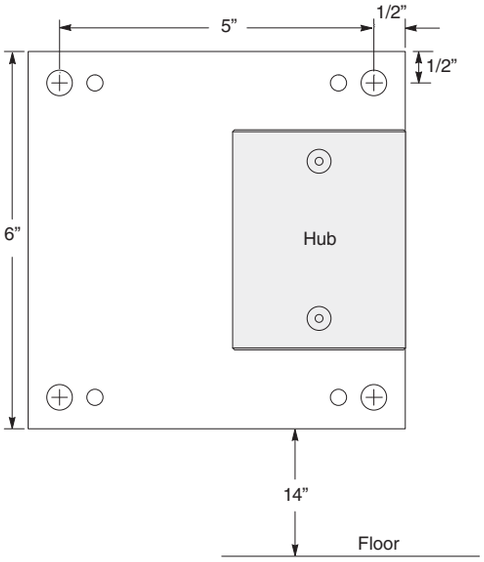

MT600/MT610 Compact Controls

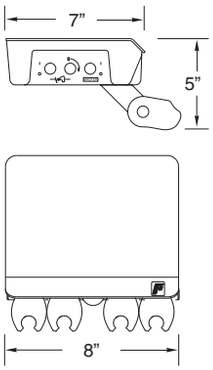

MT600/610BS Leveling/Mounting Plate

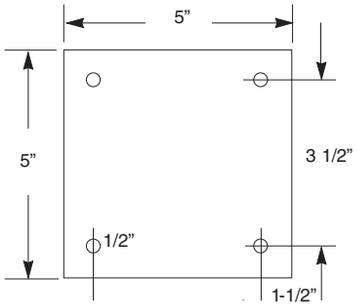

1700-140 Slide Mount With Swivel Option

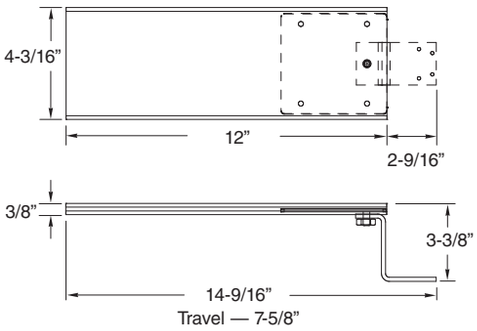

Forest Packages
Chairs and Stools
Lights and Monitor Mounts
7000 Series
Delivery Systems
Simplified
Factory Options and Parts
General Information
Equipment Warranty
Radiance Operatory
Imagine + Operatory
Operatory Mobile
Sterilization Centers
Orthodontic Cabinetry
Reception/Front Desk Cabinetry
Color Options
Cabinet Warranty
Compressors
Dry Vacuums
Tanks
Wet Vacuums
Utility Room Accessories
Utility Warranty

Dimensions

1284 Rear, Beneath Work Surface

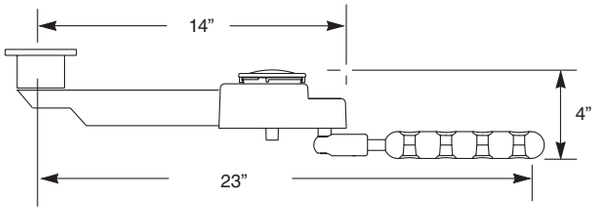

1286 Rear, Beneath Shelf

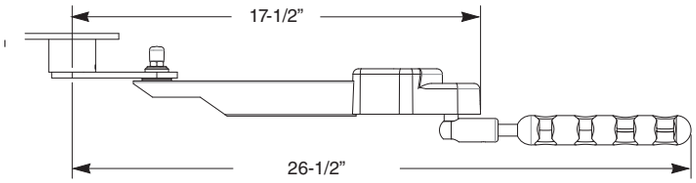

1700-142 Slide Mount Option, 1284/2184

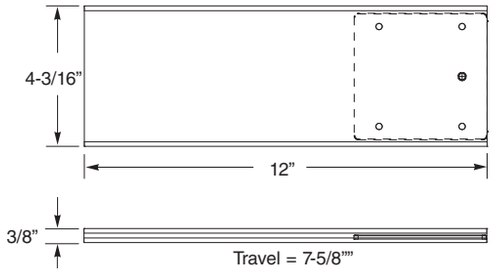

1284/1286 Mounting Plate

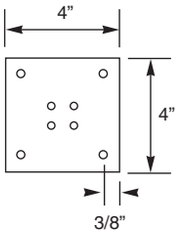

5350/5355 Standard IC Cart

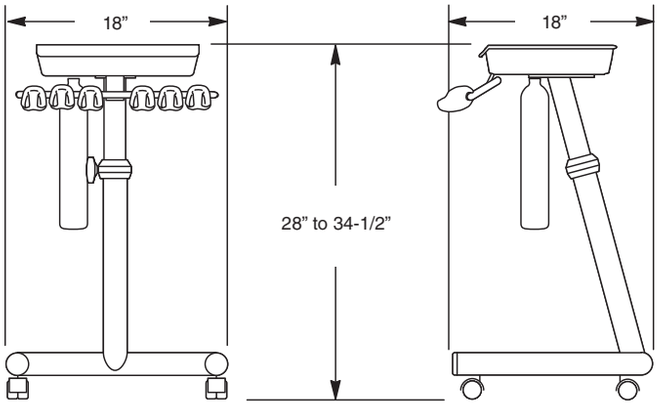

5350/5355 Work Surface

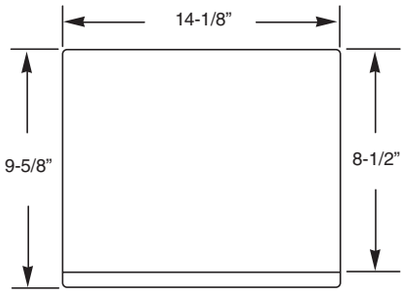

Proper maintenance will prolong the life of the dental equipment. It is important to adhere to routine practices for patient safety and avoid premature aging of the dental equipment. Following the step by step details outlined in the Forest Operator Guides included with the product will provide valuable information to achieve optimum success maintaining patient safety and the lifespan of the treatment room equipment.

Forest Packages
Chairs and Stools
Lights and Monitor Mounts
7000 Series
Delivery Systems
Simplified
Factory Options and Parts
General Information
Equipment Warranty
Radiance Operatory
Imagine + Operatory
Operatory Mobile
Sterilization Centers
Orthodontic Cabinetry
Reception/Front Desk Cabinetry
Color Options
Cabinet Warranty
Compressors
Dry Vacuums
Tanks
Wet Vacuums
Utility Room Accessories
Utility Warranty

DENTALEZ and its employees are proud of the products we provide to the dental community. We stand behind these products with a warranty against defects in material and workmanship as provided below.

In the event that you experience difficulty with the application or operation of any of our products, please contact our technical service department at our expense at (800)423-3555.

If we cannot resolve the issue by telephone, we will arrange for a representative to contact you or suggest that the product be repaired by a dealer service technician.

If product return is required, we will provide you with a Return Authorization number and shipping instructions to return the product to the proper facility. If the product is under warranty we will ask you to provide proof of purchase such as a copy of your invoice. Please be sure to include the Return Authorization number on the package you are returning. It is the responsibility of the purchaser/end user to immediately cease using the product upon discovery that the product is not in proper working order and to dispose of any defective product that is not returned to DENTALEZ.

Freight costs for product returns are the responsibility of the customer. Products under warranty will be repaired or replaced, at our sole discretion, and returned at our expense. We are not responsible for shipping damages. We will, however, help you file a claim with the freight carrier.

DENTALEZ warrants all equipment and parts to be free of defects in material and workmanship, under normal usage, under the following terms:

Forest	Limited Warranty Period*
Patient chairs / Provider stools	5 years from date of installation
Chair / Stool upholstery	2 years from date of installation
Delivery systems	5 years from date of installation
7000 series delivery system chassis	20 years from date of installation
Handpiece illumination systems	6 months from date of installation
Power suppliers, Syringe buttons, HVE and SE valves	1 year from date of installation
Water bottles, gas springs, and handpiece tubing	2 years from date of installation
Air and Water tubing connectors (T's), Distribution block, Master control block, Flow valves	20 years from date of installation
Operatory lights	5 years from date of installation

Please note the following additional terms of our warranty and return policy:

- This warranty covers manufacturing defects only and does not cover defects resulting from abuse, accidents, misuse, improper handling, cleaning, care or maintenance. Damage, including, without limitation, discoloration of upholstery, resulting from contact, such as dye transfer, from garments worn by dental staff/team, the use of chemicals, cleaners, disinfectants or sterilization is not covered under this warranty nor is normal wear and tear. Failure to follow or observe our operating/use, maintenance and/or installation instructions voids this warranty as does the use of non-authorized parts and repairs made by an unauthorized repair facility.
- **Liability is limited to repair or replacement of the defective part(s) or products at our sole discretion. All other liabilities, in particular liability for damages, including, without limitation, special, exemplary, consequential or incidental damages are excluded.**
- THIS WARRANTY IS IN LIEU OF ALL OTHER WARRANTIES, EXPRESSED OR IMPLIED, INCLUDING ANY IMPLIED WARRANTIES OF MERCHANTABILITY OR FITNESS FOR A PARTICULAR PURPOSE. NO EMPLOYEE, REPRESENTATIVE OR DEALER IS AUTHORIZED TO CHANGE THIS WARRANTY IN ANY WAY OR TO GRANT ANY OTHER WARRANTY.

CANCELLATION POLICY:
Standard orders: Written cancellation request required within 3 days of order entry date, otherwise a 25% restock fee will be charged. Expedited ship date requests are non-cancellable.

CUSTOM ORDERS:
- Custom configurations are those that deviate from Forest's published product offering; these orders are non-cancellable and non-returnable.
- May be subject to an additional "Deviation" charge and/or a non-refundable engineering charge.
- Custom powder coat, custom plastic surface treatments and/or custom treatments such as multiple color combinations or custom colors may result in an upcharge of 10-15% per model and are non-cancellable and non-returnable.

WARRANTY REPLACEMENTS:
Parts replaced on a product that is in warranty will be warranted for the duration of that product's original warranty

PRODUCT RETURN:
Opened products or product returns more than a year old cannot be returned for credit. There will be a 25% ($25.00 minimum) restocking charge on all items authorized for return.

Ultraleather is a registered trademark of Ultrafabrics, Inc., Formica is a registered trademark of The Diller Corporation, Corian is a registered trademark of DuPont, Wilsonart is a registered trademark of Wilsonart LLC., Meganite is a registered trademark of Lai, James, Naugahyde is a registered trademark of United States Rubber Products, Inc., and Active tilt is a registered trademark of Crown Seating.
Designer Friendly is a registered trademark of DTE Oregon, Inc.

Forest Packages
Chairs and Stools
Lights and Monitor Mounts
7000 Series
Delivery Systems
Simplified
Factory Options and Parts
General Information
Equipment Warranty
Radiance Operatory
Imagine + Operatory
Operatory Mobile
Sterilization Centers
Orthodontic Cabinetry
Reception/Front Desk Cabinetry
Color Options
Cabinet Warranty
Compressors
Dry Vacuums
Tanks
Wet Vacuums
Utility Room Accessories
Utility Warranty

Heritage

EQUIPMENT

EMBRACING OUR TRADITION

DENTALEZ has been providing high-quality equipment to the dental industry for over 60 years. The DENTALEZ Heritage product line continues the legacy of DENTALEZ equipment in a dedicated online catalog while supplies last. The future of DENTALEZ equipment will be re-imagined through the lens of the Forest equipment portfolio.

DENTALEZ.COM/HERITAGE

Contact your local representative for more information.

Forest Packages

Chairs and Stools

Lights and Monitor Mounts

7000 Series

Delivery Systems

Simplified

Factory Options and Parts

General Information

Equipment Warranty

Radiance Operatory

Imagine + Operatory

Operatory Mobile

Sterilization Centers

Orthodontic Cabinetry

Reception/Front Desk Cabinetry

Color Options

Cabinet Warranty

Compressors

Dry Vacuums

Tanks

Wet Vacuums

Utility Room Accessories

Utility Warranty

Imagine +

Forest Packages

Chairs and Stools

Lights and Monitor Mounts

7000 Series

Delivery Systems

Simplified

Factory Options and Parts

General Information

Equipment Warranty

Radiance Operatory

Imagine + Operatory

Operatory Mobile

Sterilization Centers

Orthodontic Cabinetry

Reception/Front Desk Cabinetry

Color Options

Cabinet Warranty

Compressors

Dry Vacuums

Tanks

Wet Vacuums

Utility Room Accessories

Utility Warranty

RADIANCE
OPERATORY CABINETRY

Forest Packages

Chairs and Stools

Lights and Monitor Mounts

7000 Series

Delivery Systems

Simplified

Factory Options and Parts

General Information

Equipment Warranty

Radiance Operatory

Imagine + Operatory

Operatory Mobile

Sterilization Centers

Orthodontic Cabinetry

Reception/Front Desk Cabinetry

Color Options

Cabinet Warranty

Compressors

Dry Vacuums

Tanks

Wet Vacuums

Utility Room Accessories

Utility Warranty

CABINETS

Radiance Operatory **116**

Rear Cabinet (12 O'clock) 116

Side Cabinets 119

Island Cabinet 121

Imagine + Operatory **125**

Rear Cabinet (12 O'clock) 126

Side Cabinets 140

Island Cabinet 150

Operatory Mobile **157**

Sterilization Centers **163**

Orthodontic Cabinetry **170**

Reception/Front Desk Cabinetry **180**

Color Options **186**

Warranty **187**

RADIANCE
OPERATORY CABINETRY

IP-12R-S77

IP-12R-S77

IP-12R-ST77
w/optional work surface
and Delivery Unit

Forest Packages
Chairs and Stools
Lights and Monitor Mounts
7000 Series
Delivery Systems
Simplified
Factory Options and Parts
General Information
Equipment Warranty
Radiance Operatory
Imagine + Operatory
Operatory Mobile
Sterilization Centers
Orthodontic Cabinetry
Reception/Front Desk Cabinetry
Color Options
Cabinet Warranty
Compressors
Dry Vacuums
Tanks
Wet Vacuums
Utility Room Accessories
Utility Warranty

RADIANCE
OPERATORY CABINETRY

IP-12R-77 and IP-12R-ST77

Radiance 12 O'clock Treatment 12R-77

Description	Part Number
Radiance 12 O'clock Treatment Non Pass Thru	IP-12R-77
Radiance 12 O'clock Treatment Pass Thru	IP-12R-77PT

Features (included in retail price)

Solid surface countertop

Frame front upper cabinet with Plexiglass windows;Resin inserts extra

Upper cabinet includes Radiance Illumination-side, task and top LED lighting with 9 adjustable shelves. (accommodates most manufacturers tub sizes)

Small equipment compartments on Doctor's and Assistant's side

LED task lighting and 20 amp outlets- USB port

Midsection designed to accommodate Nitrous built in Flo Meters

USB Hub and clock timer recessed

Shown with optional Lumicor resin insert windows

Dimensions	In Inches
Width	43 1/4"
Height	77"
Countertop Height	32 1/4"
Depth	22"
Shipping Weight	550 lb.

Radiance 12 O'clock Treatment 12R-ST77

Description	Part Number
Radiance 12 O'clock Treatment Non Pass Thru	IP-12R-ST77
Radiance 12 O'clock Treatment Pass Thru	IP-12R-ST77PT

Features (included in retail price)

Solid surface countertop with sliding top - Corian group 1-2 or Gibraltargroup 1-3 countertop and work surface

Frame front upper cabinet with Plexiglass windows and lift up upper cabinet single door

Upper cabinet includes Radiance Illumination-side and top LED lighting with 9 adjustable Plexiglass tray shelves. (accommodates most manufacturers tub sizes)

Midsection Upper Cabinet with task LED lighting

Small equipment compartments on Doctor's and Assistant's side

LED task lighting and 20 amp outlets- USB port

Midsection designed to accommodate Nitrous built in Flo Meters

USB Hub and clock timer recessed

BDS Delivery system (not included)

Forest Packages
Chairs and Stools
Lights and Monitor Mounts
7000 Series
Delivery Systems
Simplified
Factory Options and Parts
General Information
Equipment Warranty
Radiance Operatory
Imagine + Operatory
Operatory Mobile
Sterilization Centers
Orthodontic Cabinetry
Reception/Front Desk Cabinetry
Color Options
Cabinet Warranty
Compressors
Dry Vacuums
Tanks
Wet Vacuums
Utility Room Accessories
Utility Warranty

RADIANCE
OPERATORY CABINETRY

IP-12R-77 and IP-12R-ST77

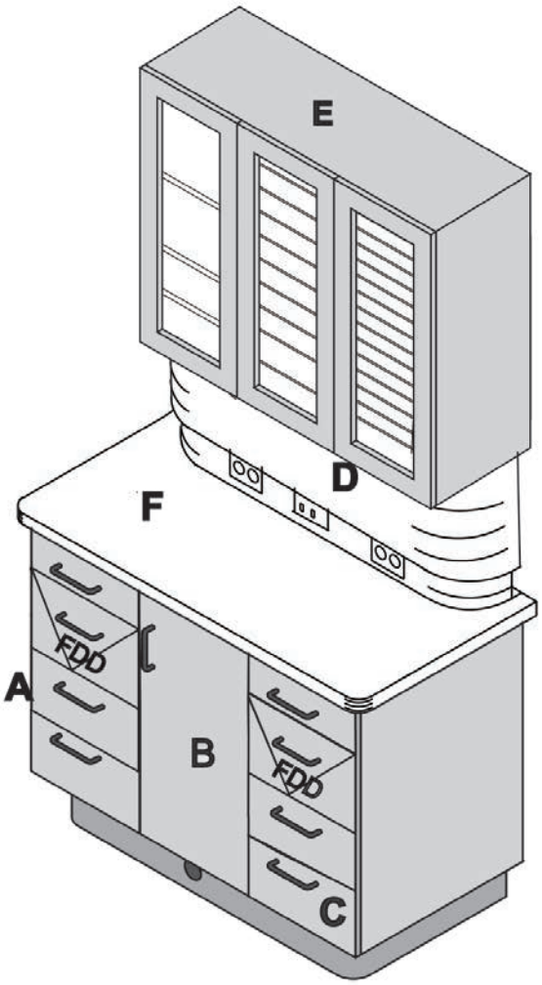

Radiance Island Module with X-Ray Enclosure

	Description	Part Number
	Radiance 12 O'clock Treatment	IP-12R-77
	Base Cabinet (A-C)	
A	Base Module includes; 1 Side Flip Drop Drawer and 2 4” drawers 4 Drawers- Doctor’s front facing	
B	Base CPU Module	
C	Base Module includes; 1 SFIP Drop Drawer and 2 4” drawers 4 Drawers – Assistant’s front facing	
	Midsection (D)	
D	8” deep-Standard curved midsection or 10” deep to accomodate nitrous flow meter	
D	Task LED lighting	
D	USB Hub -Clock Timer – recessed	
	Upper Cabinet (E)	
E	3 doors-frame front with Plexiglas (9 each) inserts	
E	Glass shelves	
E	Puck LED lighting	
E	Side LED lighting	
	Solid Surface Countertop (F)	
F	Corian group 1-2 or Gibraltar group 1-3	

Popular Options for 12R-77NPT and 12R-77PT

Description	Part Number
Assistant’s vacuum package	IP-AVP
Nitrous Flow Meter	IP-CO/COMM
Flush Monitor Mount - mounts to Midsection	IP-FMM
Lumicor Resin Panels (3)-see standard choices	IP-GDIR
Glass tray shelf each	IP-GTS
Second HVE on AVP	IP-HVE2
Left/Right unit with 3 HP positions, HVE, SE, SYR-7' Umbellical-Air-Water Regulators	IP-LRU-BDS-3150
Retracting door system - Nitrous area	IP-RDS
Side flip down drawer	IP-SFLIP
Sliding monitor mount	IP-SMM
Side drawers (4)	IP-SDRW4
Under countertop unit mount	MT600
X-ray shielding	IP-XRS
Pivoting top – solid surface	IP-PT
Solid Surface Countertop with sliding top – Corian or Gibraltar- Series A/B	IP-SST

Forest Packages
Chairs and Stools
Lights and Monitor Mounts
7000 Series
Delivery Systems
Simplified
Factory Options and Parts
General Information
Equipment Warranty
Radiance Operatory
Imagine + Operatory
Operatory Mobile
Sterilization Centers
Orthodontic Cabinetry
Reception/Front Desk Cabinetry
Color Options
Cabinet Warranty
Compressors
Dry Vacuums
Tanks
Wet Vacuums
Utility Room Accessories
Utility Warranty

RADIANCE
OPERATORY CABINETRY

IP-RSMS-64L and IP-RSMS-64R

IP-RSMS-64L

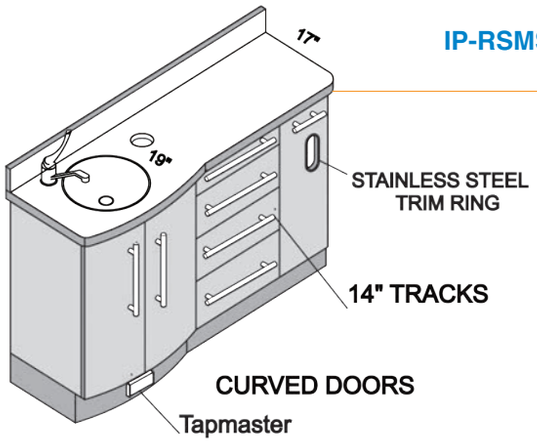

IP-RSMS-64R

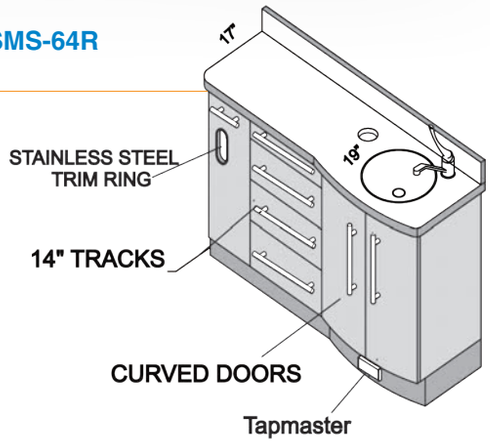

Features

- Standard Features-1" Solid Surface Top, Soft Close Doors and Drawers-Tapmaster and Glove Holder
- Drawer cabinets standard: (1) 3 5/8", (1) 7 3/8", (1) 7", and (1) 8 1/4"
- Bar handle pulls
- 14" drawer tracks
- Soft close and extension drawer tracks
- Waste compartment with 5" molded countertop drop and 36 quart waste container
- Glove holder with stainless steel meter ring
- Curved cabinet and countertop
- Curved sink cabinet and countertop
- 13 5/8" diameter x 5 1/4" drop stainless steel sink
- Tapmaster

Dimensions	In Inches
Length	64"
Depth	17"
Curved Area	19"
Height	32 1/2"

IP-RSMS-64L and IP-RSMS-64R

Description	Part Number
Radiance Doctor's/Assistant's Side Modules	IP-RSMS-64L
Radiance Doctor's/Assistant's Side Modules	IP-RSMS-64R

Popular Options

Description	Part Number
Radiance Soap Dispenser	IP-SD

RSM-64L and RSM-64R

RSM-64L and RSM-64R (less sink and Tapmaster)

Description	Part Number
Radiance Doctor's/Assistant's Side Modules	IP-RSM-64L
Radiance Doctor's/Assistant's Side Modules	IP-RSM-64R

IP-RSM-64L

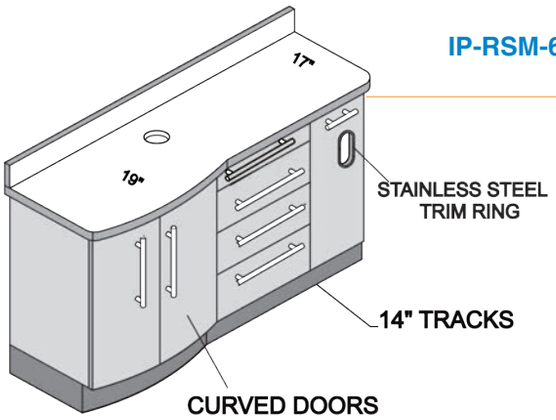

IP-RSM-64R

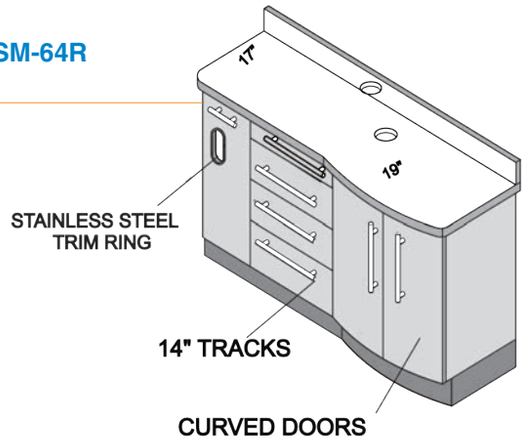

Forest Packages
Chairs and Stools
Lights and Monitor Mounts
7000 Series
Delivery Systems
Simplified
Factory Options and Parts
General Information
Equipment Warranty
Radiance Operatory
Imagine + Operatory
Operatory Mobile
Sterilization Centers
Orthodontic Cabinetry
Reception/Front Desk Cabinetry
Color Options
Cabinet Warranty
Compressors
Dry Vacuums
Tanks
Wet Vacuums
Utility Room Accessories
Utility Warranty

RADIANCE
OPERATORY CABINETRY

IP-RSMS-55L and IP-RSMS-55R

IP-RSMS-55L

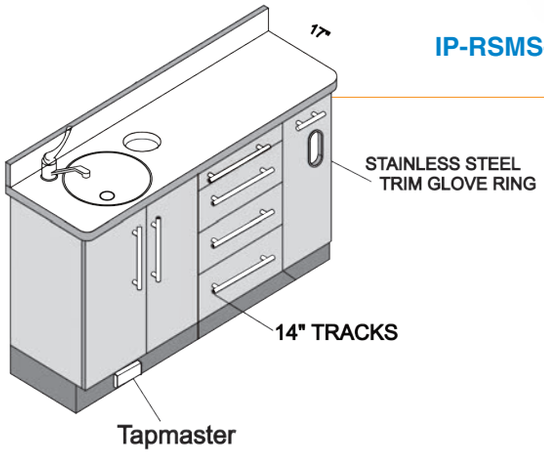

IP-RSMS-55R

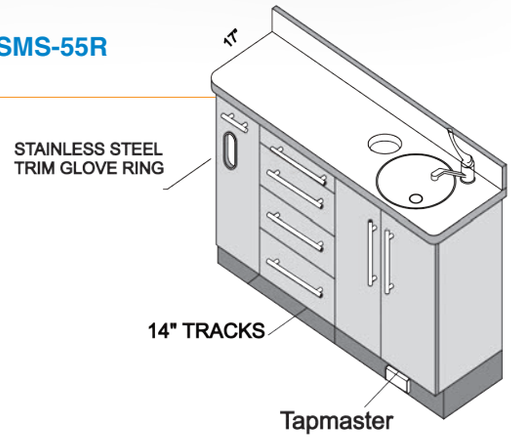

Features

- 1" Solid Surface Top, Soft Close Drawers and Doors- Tapmaster and Glove Dispenser included
- Drawer cabinets standard: (1) 3 5/8", (1) 7 3/8", (1) 7", and (1) 8 1/4"
- Bar handle pulls
- 14" drawer tracks
- Soft close and extension drawer tracks
- Waste compartment with 5" molded countertop drop and 36 quart waste container
- Glove holder with stainless steel trim ring
- 13 5/8" diameter x 5 1/4" drop stainless steel sink
- Tapmaster faucet combo (w/ foot activator with lock)

IP-RSMS-55L and IP-RSMS-55R

Description	Part Number
Radiance Doctor's/Assistant's Side Modules	IP-RSMS-55L
Radiance Doctor's/Assistant's Side Modules	IP-RSMS-55R

Popular Options

Description	Part Number
Radiance Soap Dispenser	IP-SD

IP-RSM-55L and IP-RSM-55R

Dimensions	In Inches
Length	55"
Depth	17"
Height	32 1/2"

IP-RSM-55L and IP-RSM-55R (less sink and Tapmaster)

Description	Part Number
Radiance Doctor's/Assistant's Side Modules	IP-RSM-55L
Radiance Doctor's/Assistant's Side Modules	IP-RSM-55R

IP-RSM-55L

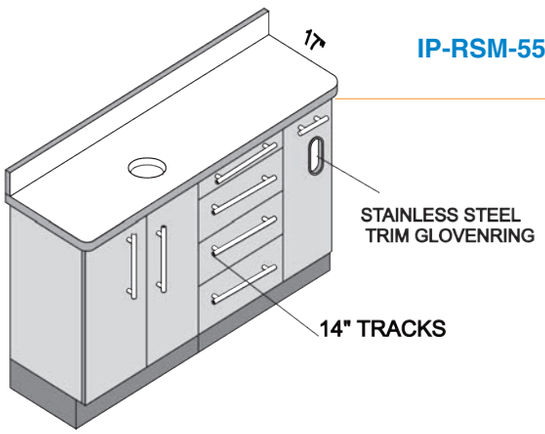

IP-RSM-55R

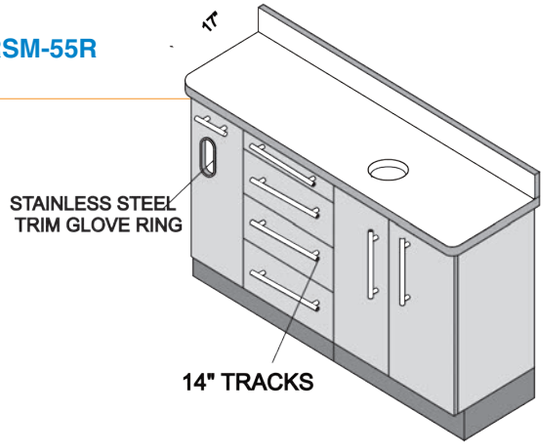

Forest Packages
Chairs and Stools
Lights and Monitor Mounts
7000 Series
Delivery Systems
Simplified
Factory Options and Parts
General Information
Equipment Warranty
Radiance Operatory
Imagine + Operatory
Operatory Mobile
Sterilization Centers
Orthodontic Cabinetry
Reception/Front Desk Cabinetry
Color Options
Cabinet Warranty
Compressors
Dry Vacuums
Tanks
Wet Vacuums
Utility Room Accessories
Utility Warranty

RADIANCE
OPERATORY CABINETRY

IP-RIMX-104-88

IP-RIMX-104-88

Pass Thru Upper Storage Cabinet

Wash Station

Forest Packages
Chairs and Stools
Lights and Monitor Mounts
7000 Series
Delivery Systems
Simplified
Factory Options and Parts
General Information
Equipment Warranty
Radiance Operatory
Imagine + Operatory
Operatory Mobile
Sterilization Centers
Orthodontic Cabinetry
Reception/Front Desk Cabinetry
Color Options
Cabinet Warranty
Compressors
Dry Vacuums
Tanks
Wet Vacuums
Utility Room Accessories
Utility Warranty

RADIANCE
OPERATORY CABINETRY

IP-RIMX-104-88

Radiance Island Module with X-Ray Enclosure as shown

Description	Part Number
Radiance Island Module with X-Ray Enclosure	IP-RIMX-104-88

Popular Options

Description	Part Number
Glove, Tissue or C-Fold Dispenser	IP-GD-2
Resin Door Inserts in center upper storage	IP-RDI

Dimensions	In Inches
Width	104"
Height	88"
Countertop Height	33 1/2"
Depth	20 1/2"
Depth with X-Ray Columns	23 1/2"

Features

Solid surface countertop-Corian group 1-2 or Gibraltar group 1-3

Privacy center divider with LED task lighting and dual 20 amp electrical outlets

Upper storage cabinet with 4 Plexiglass shelves and frosted glass framed window inserts (4). Radiance illumination side and task LED lighting.

Privacy X-ray bifold storage door with 3 drawers on Assistant's side and 2 drawers on Doctor's side

Sink mirror with storage compartment with 2 melamine shelves

Vessel Sink in Brushed Nickel and Brushed Nickel sink faucet

Tapmaster foot control sink

RIMX-104-88 with Glass Bowl Option

Forest Packages
Chairs and Stools
Lights and Monitor Mounts
7000 Series
Delivery Systems
Simplified
Factory Options and Parts
General Information
Equipment Warranty
Radiance Operatory
Imagine + Operatory
Operatory Mobile
Sterilization Centers
Orthodontic Cabinetry
Reception/Front Desk Cabinetry
Color Options
Cabinet Warranty
Compressors
Dry Vacuums
Tanks
Wet Vacuums
Utility Room Accessories
Utility Warranty

RADIANCE
OPERATORY CABINETRY

RIMX-104-88

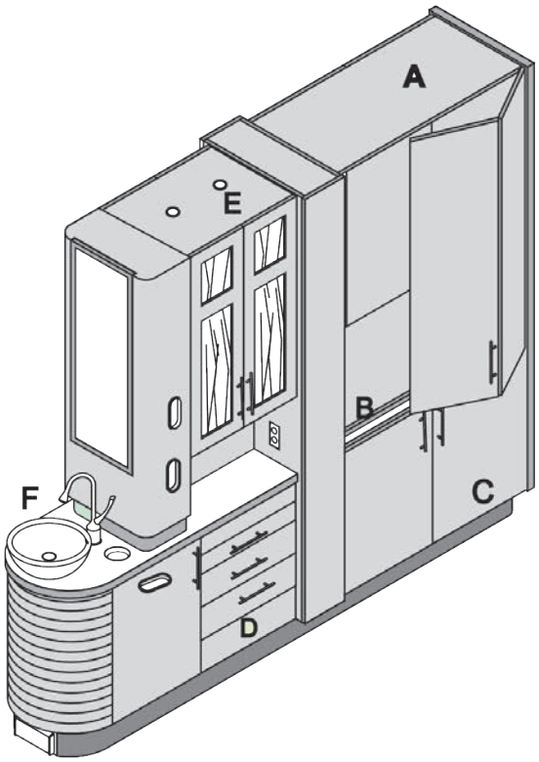

Radiance Island Module with X-Ray Enclosure

	Description	Part Number
	Island module with X-ray enclosure – solid surface sink base – soft close doors and drawers-wash station with sink and tapmaster	IP-RIMX-104-88
A	X-ray shielding and x-ray storage compartment	IP-RIMX-104-88-XRS
B	Drawer under X-ray compartment	IP-RIMX-104-88-DWR
C	Pass thru base cabinet under X-ray storage compartment with 2 doors and 2 adjustable shelves	IP-RIMX-104-88-BCPT
D	Pass thru base with drawers	IP-RIMX-104-88-BCD
E	Upper Storage cabinet with shelves and plexi glass windows inserts (Pass Thru). Cabinet has Radiance illumination side and LED task lighting	N/A
F	Wash Station with mirror, brushed nickel vessel sink and Tapmaster.	N/A

Popular Options

Description	Part Number
Glove, Tissue or C-Fold Dispenser	IP-GD-2
Resin Door Inserts in center upper storage	IP-RDI
Soap dispenser	IP-SD
Tapmaster foot control deduction	IP-TMC

Wash Station

Sink choices: glass, brushed nickel vessels, under mounted stainless steel or molded solid surface

Glass mirror has touch latch and opens to a medicament storage cabinet

Forest Packages
Chairs and Stools
Lights and Monitor Mounts
7000 Series
Delivery Systems
Simplified
Factory Options and Parts
General Information
Equipment Warranty
Radiance Operatory
Imagine + Operatory
Operatory Mobile
Sterilization Centers
Orthodontic Cabinetry
Reception/Front Desk Cabinetry
Color Options
Cabinet Warranty
Compressors
Dry Vacuums
Tanks
Wet Vacuums
Utility Room Accessories
Utility Warranty

RADIANCE
OPERATORY CABINETRY

Door Detail

Island Upper Storage

Radiance
Illumination Side LED

Lumicor Insert Light
transparent resin panels

Island Upper Cabinet View

12 O'clock Flip Door (Optional)

LED Lighting

PlexiGlass Shelves

Forest Packages
Chairs and Stools
Lights and Monitor Mounts
7000 Series
Delivery Systems
Simplified
Factory Options and Parts
General Information
Equipment Warranty
Radiance Operatory
Imagine + Operatory
Operatory Mobile
Sterilization Centers
Orthodontic Cabinetry
Reception/Front Desk Cabinetry
Color Options
Cabinet Warranty
Compressors
Dry Vacuums
Tanks
Wet Vacuums
Utility Room Accessories
Utility Warranty

Imagine+

Rear (12 O'clock) Cabinets

Ask about our custom cabinets!

Forest Packages
Chairs and Stools
Lights and Monitor Mounts
7000 Series
Delivery Systems
Simplified
Factory Options and Parts
General Information
Equipment Warranty
Radiance Operatory
Imagine + Operatory
Operatory Mobile
Sterilization Centers
Orthodontic Cabinetry
Reception/Front Desk Cabinetry
Color Options
Cabinet Warranty
Compressors
Dry Vacuums
Tanks
Wet Vacuums
Utility Room Accessories
Utility Warranty

IP-12T-S, IP-12T-SPT and IP-12T-SD, IP-12T-SDPT

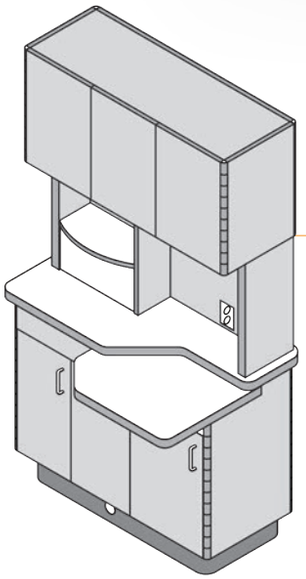

IP-12T-S
Standard Non Pass-Thru

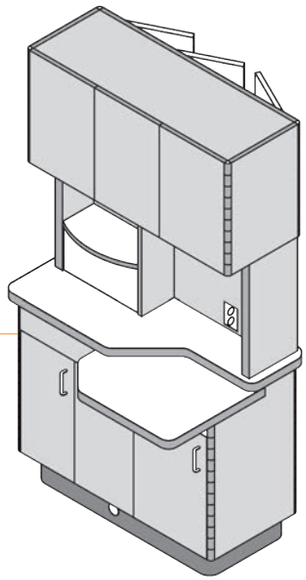

IP-12T-SPT
Standard Pass-Thru

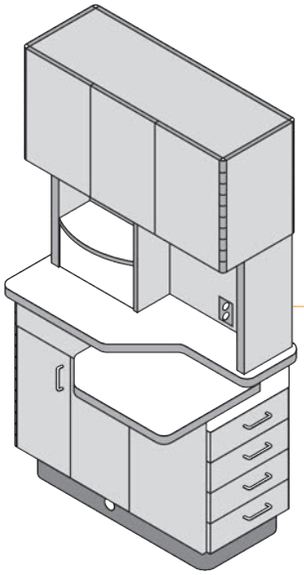

IP-12T-SD
Standard Non Pass-Thru

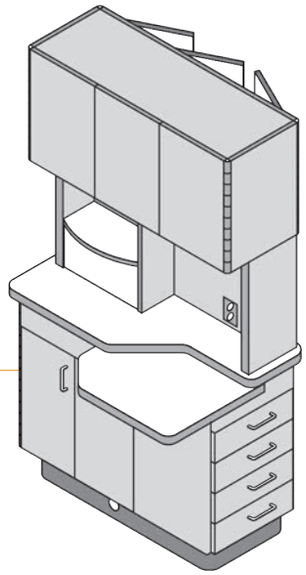

IP-12T-SDPT
Standard Non Pass-Thru

12 O'Clock Treatment, IP-12T

Description	Part Number
12 O'clock Treatment Center (Standard)	IP-12T-S
12 O'clock Treatment Center (Passthru)	IP-12T-SPT
12 O'clock Treatment Center with side drawers (Standard)	IP-12T-SD
12 O'clock Treatment Center with side drawers (Passthru)	IP-12T-SDPT

Dimensions	In Inches
Length	43 1/4"
Depth	29" Retracted-36" Extended
Height	75"
Countertop	33 1/2"
Shipping Weight	600 lb.

Features

Includes Solid Surface Top Soft Close Doors

One storage cabinet with adjustable shelves (Dr's side)

Removable bottom for utility connections

Pullout work surface extends from 29" to 36"

12" task light and 20-amp outlet

Aluma steel base with leveling feet

IP-12T-S ONLY

One storage cabinet with pullout drawer (Asst's side)

Upper cabinet with adjustable tub and tray racks two adjustable shelves

(Accommodates most manufacturers tub sizes)

IP-12T-SD ONLY

Side cabinet with four drawers (Assistant's side)

Upper cabinet with adjustable shelves

Forest Packages
Chairs and Stools
Lights and Monitor Mounts
7000 Series
Delivery Systems
Simplified
Factory Options and Parts
General Information
Equipment Warranty
Radiance Operatory
Imagine + Operatory
Operatory Mobile
Sterilization Centers
Orthodontic Cabinetry
Reception/Front Desk Cabinetry
Color Options
Cabinet Warranty
Compressors
Dry Vacuums
Tanks
Wet Vacuums
Utility Room Accessories
Utility Warranty

IP-12T-S, IP-12T-SPT and IP-12T-SD, IP-12T-SDPT

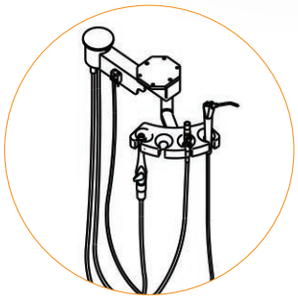

IP-AVP

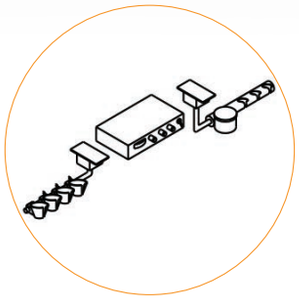

IP-UCMU

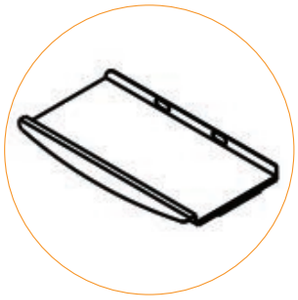

IP-KB/CW

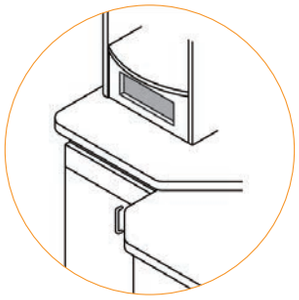

IP-CO/COMM

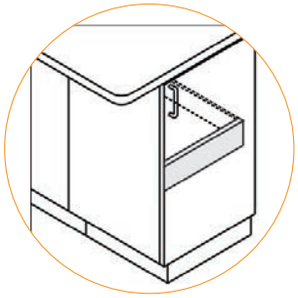

IP-SDO

12 O'Clock Treatment, IP-12T

Description	Part Number
12 O'clock Treatment Center (Standard)	IP-12T-S
12 O'clock Treatment Center (Passthru)	IP-12T-SPT
12 O'clock Treatment Center with side drawers (Standard)	IP-12T-SD
12 O'clock Treatment Center with side drawers (Passthru)	IP-12T-SDPT

Select Options

Description	Part Number
Assistant's vacuum package	IP-AVP
Cutout for communication panel	IP-CO/COMM
Drawers on doctor's side (per drw)	IP-DRW/DRS
Glass tray shelf (each)	IP-GTS
Glass door inserts (per door)	IP-GDI
Side door opening	IP-SDO
Delivery System, beneath shelf mount	MT600BS
Delivery System, top shelf mount	MT600TS

IP-12T-S ONLY

X-ray shielding for non pass thru cabinet	IP-12T-S/XRS
Sliding monitor mount	IP-SMM

IP-12T-SD ONLY

X-ray shielding for non pass thru cabinet	12T-SD/XRSIP-

Select Countertop Options

Solid Surface countertop

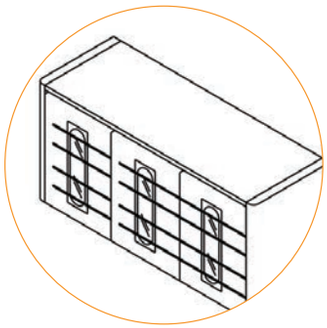

IP-GTS

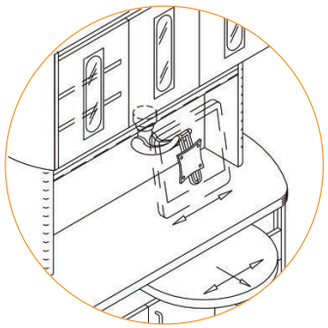

IP-SMM

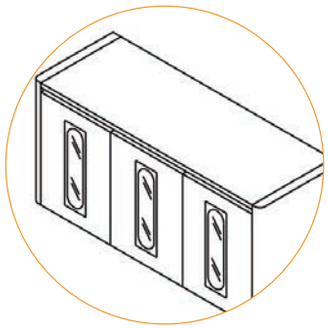

IP-GDI

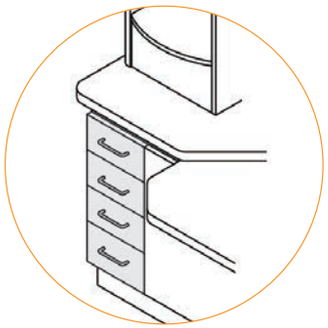

IP-DRW/DRS

Forest Packages
Chairs and Stools
Lights and Monitor Mounts
7000 Series
Delivery Systems
Simplified
Factory Options and Parts
General Information
Equipment Warranty
Radiance Operatory
Imagine + Operatory
Operatory Mobile
Sterilization Centers
Orthodontic Cabinetry
Reception/Front Desk Cabinetry
Color Options
Cabinet Warranty
Compressors
Dry Vacuums
Tanks
Wet Vacuums
Utility Room Accessories
Utility Warranty

IP-12T-S-2, IP-12T-S-2PT

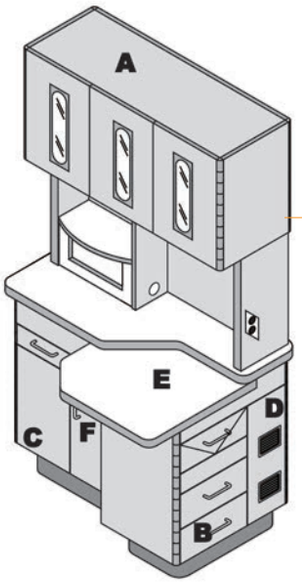

IP-12T-S-2
Standard Non Pass-Thru

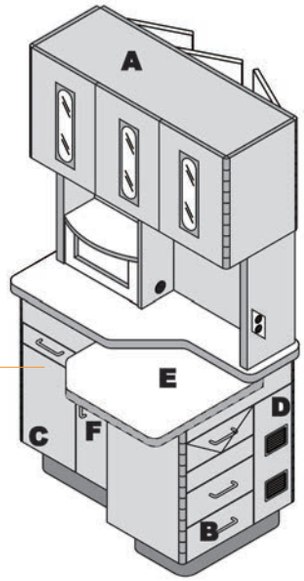

IP-12T-S-2PT
Standard Pass-Thru

12 O'Clock Treatment, IP-12T

Description	Part Number
12 O'clock Treatment Center (Standard)	IP-12T-S-2
12 O'clock Treatment Center (Passthru)	IP-12T-S-2PT

Select Options

Description	Part Number
X-ray shielding for non pass thru cabinet	IP-12T-S-2/XRS
Assistant vacuum package	IP-AVP
Cutout for Communication panel	IP-CO/COMM
Drawers on doctor's side (per drawer)	IP-DRW/DRS
Glass door (inserts per door)	IP-GDI
Glass tray shelf (each)	IP-GTS
Keyboard/w Mouse Tray	IP-KB/CWT
Side Door Option	IP-SDO
Sliding monitor mount	IP-SMM
Tapmaster foot control	IP-TMC
Delivery System, beneath shelf mount	MT600BS
Delivery System, top shelf mount	MT600TS

Select Countertop Options

Solid Surface countertop

Features

- A Upper cabinet with two fully adjustable tub and tray racks 12" task light and 20-amp outlet
- B Side cabinet with four drawers including one flip drawer (Assistant's side)
- C One storage cabinet with adjustable shelves and drawers (Doctor's side)
- D CPU storage with vents (Accommodates most manufacturers tub sizes)
- E Pullout work surface extends from 29" to 36"
- F Separate base with leveling feet. Removable bottom for utility connections

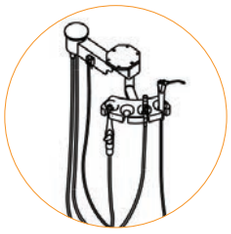
IP-AVP

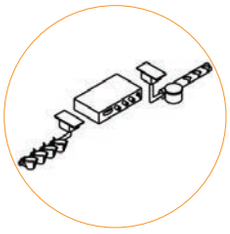
IP-UCMU

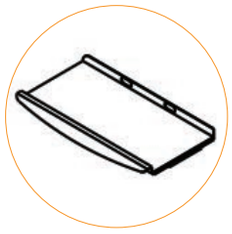
IP-KB/CW

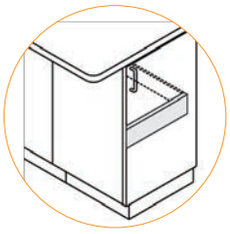
IP-SDO

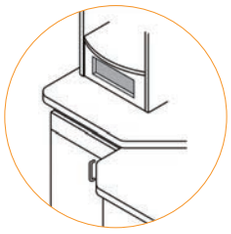
IP-CO/COMM

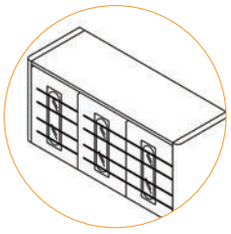
IP-GTS

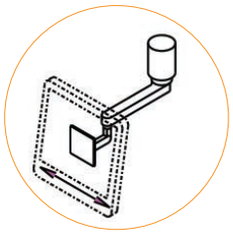
IP-SMM

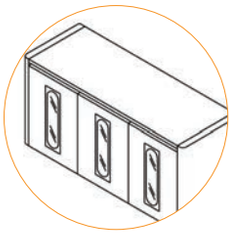
IP-GDI

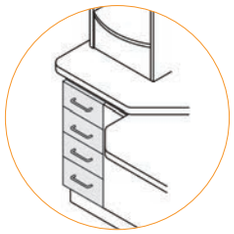
IP-DRW/DRS

Forest Packages
Chairs and Stools
Lights and Monitor Mounts
7000 Series
Delivery Systems
Simplified
Factory Options and Parts
General Information
Equipment Warranty
Radiance Operatory
Imagine + Operatory
Operatory Mobile
Sterilization Centers
Orthodontic Cabinetry
Reception/Front Desk Cabinetry
Color Options
Cabinet Warranty
Compressors
Dry Vacuums
Tanks
Wet Vacuums
Utility Room Accessories
Utility Warranty

IP-12T-SK, IP-12T-SKPT

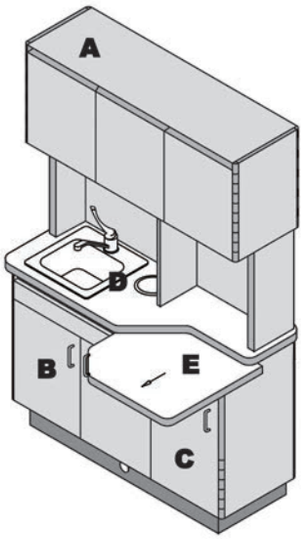

IP-12T-SK
Standard Non Pass-Thru

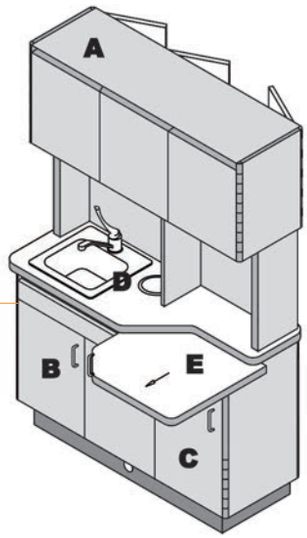

IP-12T-SKPT
Standard Pass-Thru

12 O'Clock Treatment, 12T

Description	Part Number
12 O'clock Treatment Center (Standard)	IP-12T-SK
12 O'clock Treatment Center (Passthru)	IP-12T-SKPT

Select Options

Description	Part Number
X-ray shielding for non pass thru cabinet	IP-12T-S-2/XRS
Assistant vacuum package	IP-AVP
Glass door inserts per door	IP-GDI
Glass tray shelf (each)	IP-GTS
Keyboard/w Mouse Tray	IP-KB/CWT
Soap dispenser (each)	IP-SD
Side Door Option	IP-SDO
Side flip drawer	IP-SFLIP
Tapmaster foot control	IP-TMC
Delivery System, beneath shelf mount	MT600BS
Delivery System, top shelf mount	MT600TS

Select Countertop Options

Solid Surface countertop

Features

A Upper cabinet with two fully adjustable tub and tray racks, two adjustable shelves, 12" task light and 20 amp outlet

B One sink cabinet with 36qt waste container

C One storage cabinet with pullout drawer (Accommodates most manufacturers tub sizes)

D 15"x 15"x 6" stainless steel sink with single lever faucet

E Pullout work surface extends from 30 to 38"

F Separate base with leveling feet. Removable bottom for utility connections

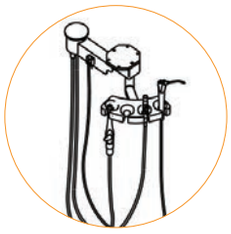

IP-AVP

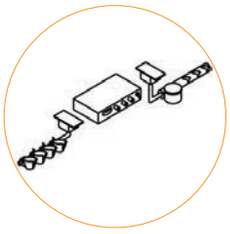

IP-UCMU

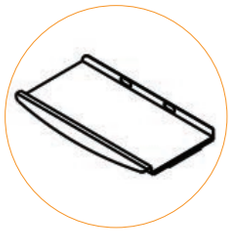

IP-KB/CW

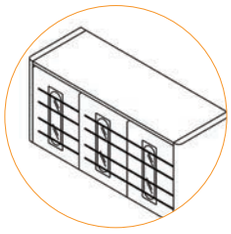

IP-GTS

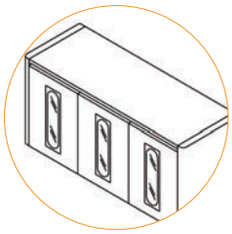

IP-GDI

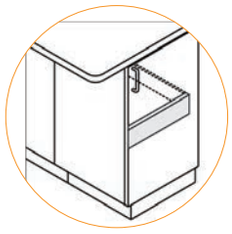

IP-SDO

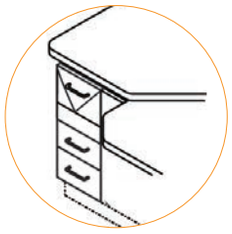

IP-SFLIP

Forest Packages
Chairs and Stools
Lights and Monitor Mounts
7000 Series
Delivery Systems
Simplified
Factory Options and Parts
General Information
Equipment Warranty
Radiance Operatory
Imagine + Operatory
Operatory Mobile
Sterilization Centers
Orthodontic Cabinetry
Reception/Front Desk Cabinetry
Color Options
Cabinet Warranty
Compressors
Dry Vacuums
Tanks
Wet Vacuums
Utility Room Accessories
Utility Warranty

IP-12T-L

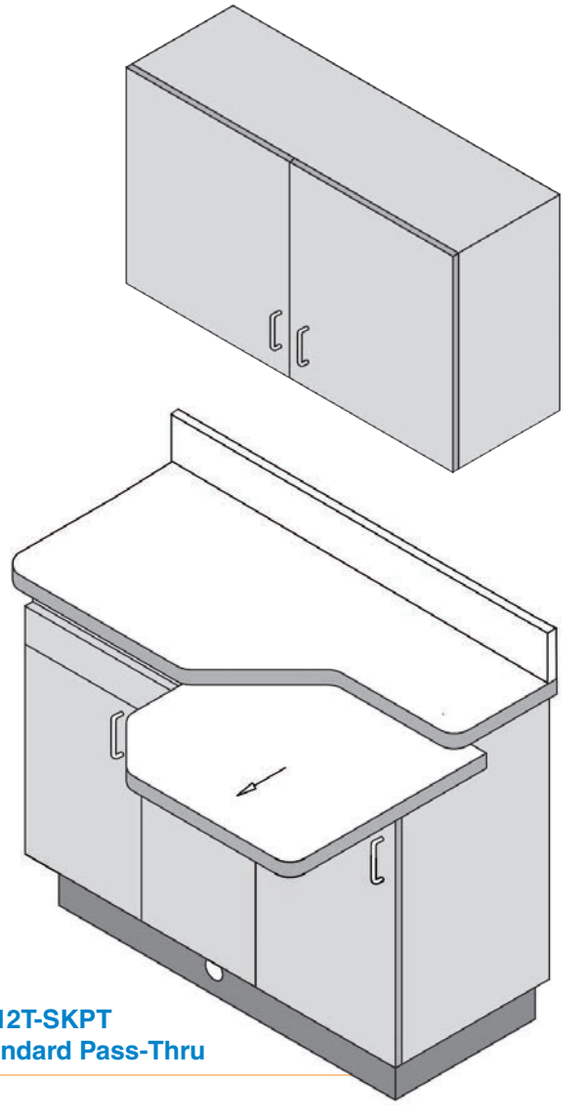

IP-12T-SKPT
Standard Pass-Thru

12 O'Clock Treatment, IP-12T-L

Description	Part Number
12 O'clock Treatment Center (Standard)	IP-12T-L

Dimensions	In Inches
Length	43 1/4"
Depth	29" Retracted-37" Extended
Height	56 5/8"
Countertop Height	33 1/2"
Pullout Regular top	22" - 23"

Select Options

Description	Part Number
X-ray shielding for non pass thru cabinet	IP-12T-S-2/XRS
Assistant vacuum package	IP-AVP
Drawers on doctor's side (per drw)	IP-DRW/DRS
Side door opening	IP-SDO
Side drawers (4)	IP-SDRW4
Side flip drawer	IP-SFLIP
Upper Cabinet	IP-UW 4230

Select Countertop Options

Solid Surface countertop

Features

1" Solid Surface Top, Soft Close Doors and Drawers and Upper Cabinet

One storage cabinet with adjustable shelves. (Doctor's side)

One storage cabinet with pullout shelves. (Assistant's side)

Removable bottom for utility connections

Pullout work surface extends from 29" to 36"

Separate base with leveling feet

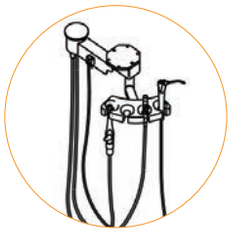

IP-AVP

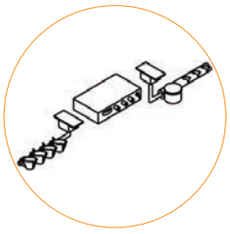

IP-UCMU

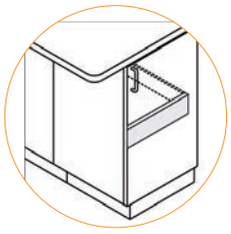

IP-SDO

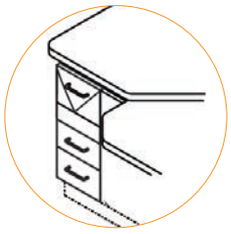

IP-SFLIP

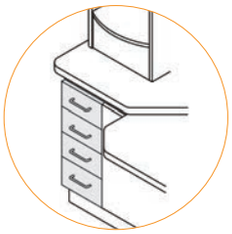

IP-DRW/DRS

IP-SDRW4

Forest Packages
Chairs and Stools
Lights and Monitor Mounts
7000 Series
Delivery Systems
Simplified
Factory Options and Parts
General Information
Equipment Warranty
Radiance Operatory
Imagine + Operatory
Operatory Mobile
Sterilization Centers
Orthodontic Cabinetry
Reception/Front Desk Cabinetry
Color Options
Cabinet Warranty
Compressors
Dry Vacuums
Tanks
Wet Vacuums
Utility Room Accessories
Utility Warranty

IP-12B-37 and IP-12B-37PT

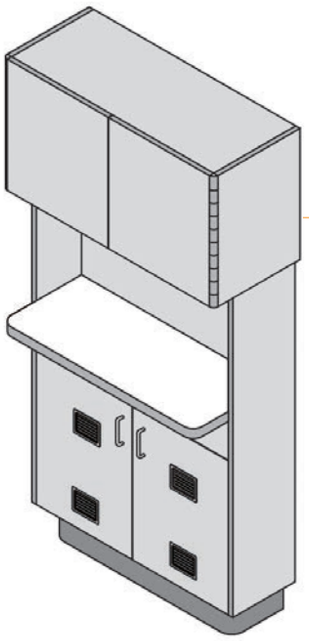

IP-12B-37
Standard Non Pass-Thru

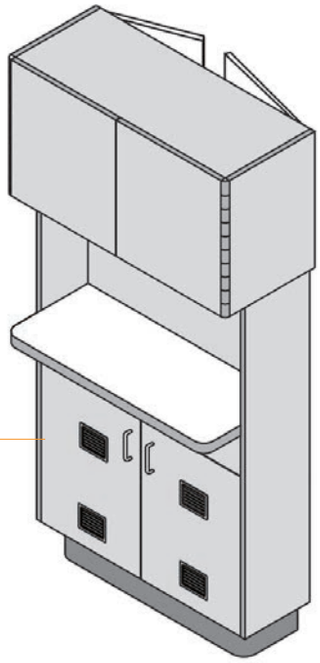

IP-12B-37PT
Standard Pass-Thru

12 O'Clock Treatment

Description	Part Number
12 O'clock Treatment Center (Standard)	IP-12B-37
12 O'clock Treatment Center (Passthru)	IP-12B-37PT

Dimensions	In Inches
Length	37 1/4"
Depth upper	15 1/4"
Depth lower	17 1/4" (@c'top)
Height	75"
Countertop	36"

Select Options

Description	Part Number
IP-12B-37PT MUST BE BOLTED TO FLOOR	
X-ray shielding for non pass thru cabinet	IP-12B-37/XRS
Glass Door Insert, in laminate door, per door	IP-GDI
Keyboard/w mouse tray	IP-KB/CWT
Sliding monitor mount	IP-SMM
White Vent Grill 10 x 4 1/4	IP-VG B101

Features

Upper cabinet with two fully adjustable tub and tray racks, and glass door inserts. (Accommodates most manufacturers tub sizes)

Lower cabinet with removable bottom for utility connections

One storage cabinet with pullout shelves. (Assistant's side)

Task lighting and 20 amp outlets

Separate base with leveling feet

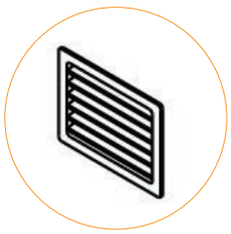

IP-VG

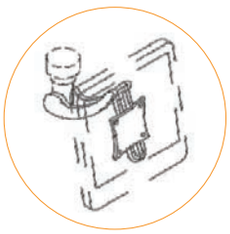

IP-SMM

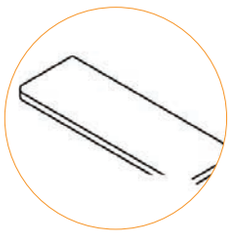

IP-12B-37/LAM

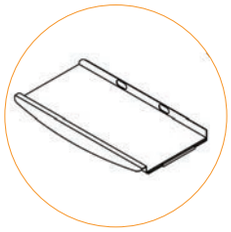

IP-KB/CWT

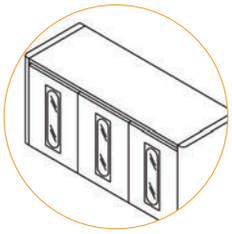

IP-GDI

Forest Packages
Chairs and Stools
Lights and Monitor Mounts
7000 Series
Delivery Systems
Simplified
Factory Options and Parts
General Information
Equipment Warranty
Radiance Operatory
Imagine + Operatory
Operatory Mobile
Sterilization Centers
Orthodontic Cabinetry
Reception/Front Desk Cabinetry
Color Options
Cabinet Warranty
Compressors
Dry Vacuums
Tanks
Wet Vacuums
Utility Room Accessories
Utility Warranty

IP-12B-43 and IP-12B-43PT

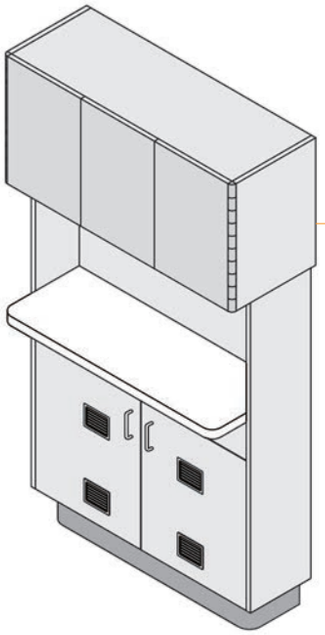

IP-12B-43
Standard Non Pass-Thru

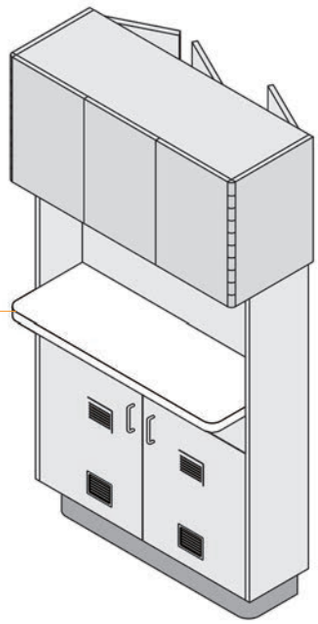

IP-12B-43PT
Standard Pass-Thru

12 O'Clock Treatment

Description	Part Number
12 O'clock Treatment Center (Standard)	IP-12B-43
12 O'clock Treatment Center (Passthru)	IP-12B-43PT

Dimensions	In Inches
Length	43 1/4"
Depth upper	15 1/4"
Depth lower	17 1/4" (@c'top)
Height	75"
Countertop	36"

Select Options

Description	Part Number
IP-12B-43PT MUST BE BOLTED TO FLOOR	
X-ray shielding for non pass thru cabinet	IP-12B-43/XRS
Glass Door Insert, in laminate door, per door	IP-GDI
Keyboard/w mouse tray	IP-KB/CWT
Sliding monitor mount	IP-SMM
Vent Grill	IP-VG B101

Features

A Upper cabinet with two fully adjustable tub and tray racks (Accommodates most manufacturers tub sizes)

Glass door inserts

Task lighting and 20 amp outlets

B Lower cabinet

Removable bottom for utility connections

Separate base with leveling feet

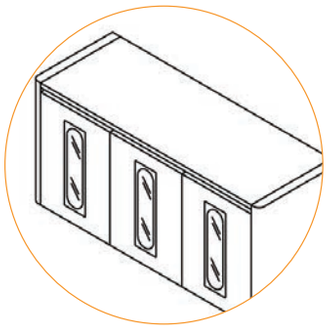

IP-GDI

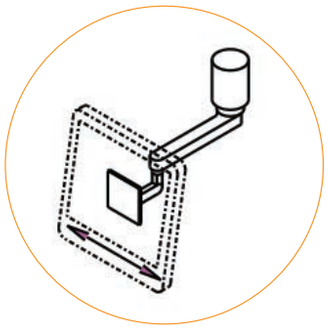

IP-SMM

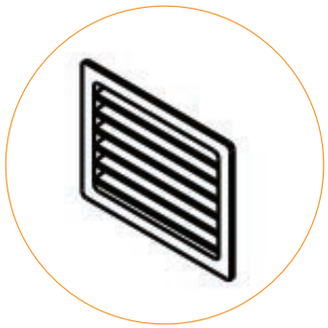

IP-VG

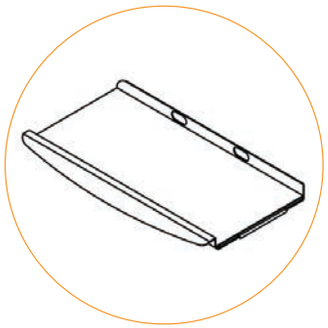

IP-KB/CWT

Forest Packages
Chairs and Stools
Lights and Monitor Mounts
7000 Series
Delivery Systems
Simplified
Factory Options and Parts
General Information
Equipment Warranty
Radiance Operatory
Imagine + Operatory
Operatory Mobile
Sterilization Centers
Orthodontic Cabinetry
Reception/Front Desk Cabinetry
Color Options
Cabinet Warranty
Compressors
Dry Vacuums
Tanks
Wet Vacuums
Utility Room Accessories
Utility Warranty

IP-12T-HT and IP-12T-HTST

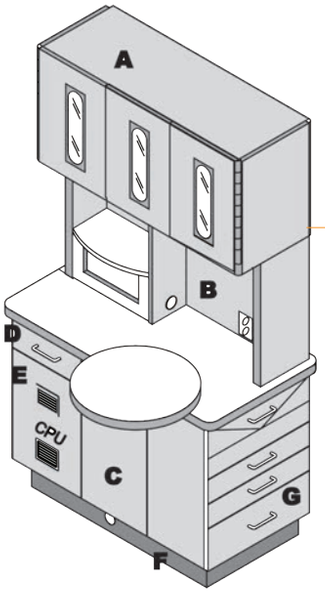

IP-12T-HT
Standard Non Pass-Thru

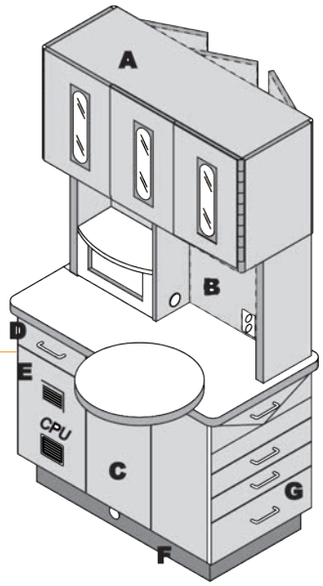

IP-12T-HTPT
Standard Pass-Thru

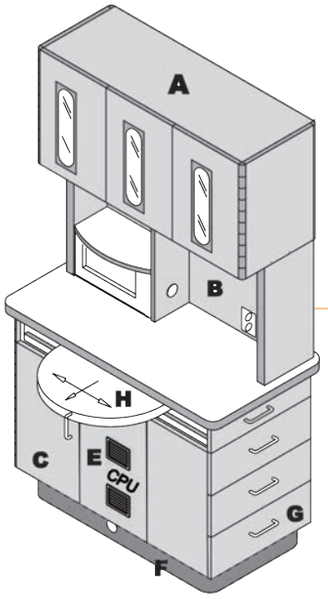

IP-12T-HTST-2
Standard Non Pass-Thru

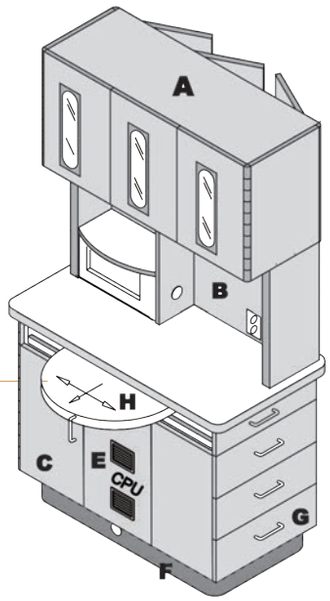

IP-12T-HTST-PT-2
Standard Pass-Thru

12 O'Clock Treatment, IP-12T

Description	Part Number
12 o'clock Treatment High Tech	IP-12T-HT
12 o'clock Treatment High Tech (Pass Thru)	IP-12T-HTPT
12 o'clock High Tech Unit w/Sliding Top	IP-12T-HTST-2
12 o'clock High Tech Unit w/Sliding Top (Pass Thru - NEW)	IP-12T-HTST-PT-2

Dimensions	In Inches
Width	43 1/4"
Height	75"
Countertop Height	33 1/2"
Depth	22"
Shipping Weight	550 lb.

Features

Includes 1" Solid Surface Top, Soft Close Doors and Drawers

A Upper cabinet with fully adjustable tub/tray racks

Two adjustable shelves (Accommodates most manufacturers tub sizes)

Task lighting and 20amp outlet

B Communications panel cutout

C Cabinet for clean water system/nitrous

D Small equipment compartment

E Cabinet for CPU storage

F Separate base with leveling feet

G Side drawers

IP-12T-HTST AND IP-12T-HTST-PT ONLY

H Pull out work surface

Forest Packages
Chairs and Stools
Lights and Monitor Mounts
7000 Series
Delivery Systems
Simplified
Factory Options and Parts
General Information
Equipment Warranty
Radiance Operatory
Imagine + Operatory
Operatory Mobile
Sterilization Centers
Orthodontic Cabinetry
Reception/Front Desk Cabinetry
Color Options
Cabinet Warranty
Compressors
Dry Vacuums
Tanks
Wet Vacuums
Utility Room Accessories
Utility Warranty

IP-12T-HT and IP-12T-HTST

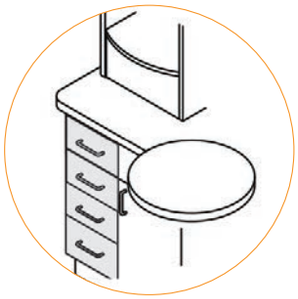

IP-DRW/DRS

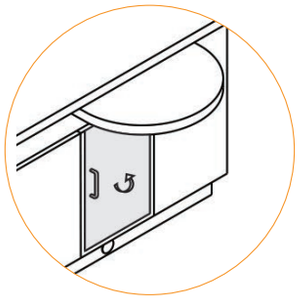

IP-RDS

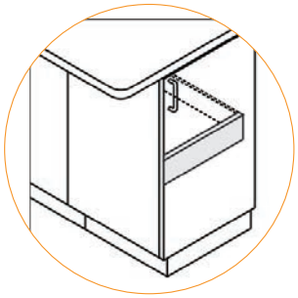

IP-SDO

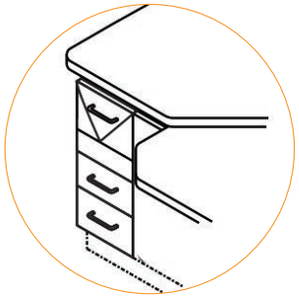

IP-SFLIP

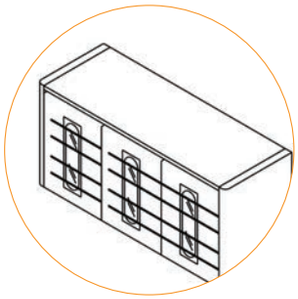

IP-GTS

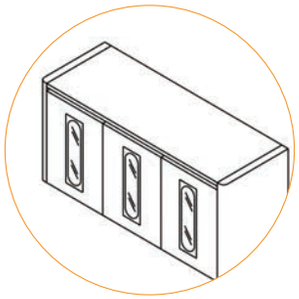

IP-GDI

12 O'Clock Treatment, IP-12T-HT

Description	Part Number
12 o'clock Treatment High Tech	IP-12T-HT
12 o'clock Treatment High Tech (Pass Thru)	IP-12T-HTPT
12 o'clock High Tech Unit w/Sliding Top	IP-12T-HTST-2
12 o'clock High Tech Unit w/Sliding Top (Pass Thru - NEW)	IP-12T-HTST-PT-2

Select Options

Description	Part Number
X-ray shielding for non pass thru cabinet	IP-12T-HT/XRS
Assistant's Vacuum Package	IP-AVP
Nitrous Flow Meter	IP-CO/COMM
Glass Door Insert, in laminate door	IP-GDI
Glass Tray Shelves-each	IP-GTS
Side Door Opening	IP-SDO
Side Drawers (4)	IP-SDRW4
Side flip drawer	IP-SFLIP
Sliding monitor mount	IP-SMM
White Vent Grill 10 x 4 1/4	IP-VG B101
Delivery System, beneath shelf mount	MT600BS
Delivery System, top shelf mount	MT600TS

Additional Options: IP-12T-HTST-2 and IP-12T-HTSTPT-2

Second HVE on AVP	IP-HVE-2
Left / Right Dual Purpose Arm & Instrumentation	IP-LRU
Retracting Door (Side)	IP-RDS

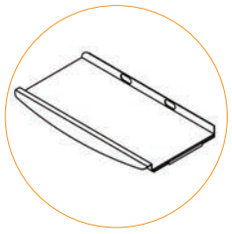

IP-KB/CW

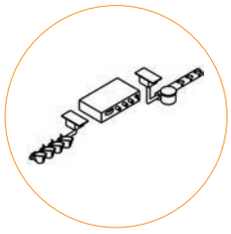

IP-UCMU

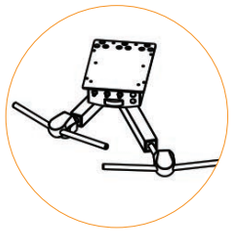

IP-LRU

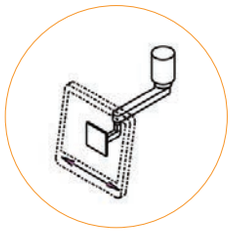

IP-SMM

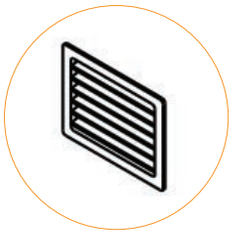

IP-VG

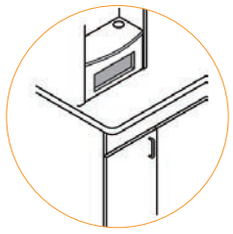

IP-CO/COMM

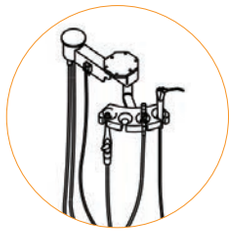

IP-AVP

Forest Packages
Chairs and Stools
Lights and Monitor Mounts
7000 Series
Delivery Systems
Simplified
Factory Options and Parts
General Information
Equipment Warranty
Radiance Operatory
Imagine + Operatory
Operatory Mobile
Sterilization Centers
Orthodontic Cabinetry
Reception/Front Desk Cabinetry
Color Options
Cabinet Warranty
Compressors
Dry Vacuums
Tanks
Wet Vacuums
Utility Room Accessories
Utility Warranty

IP-RSU-96

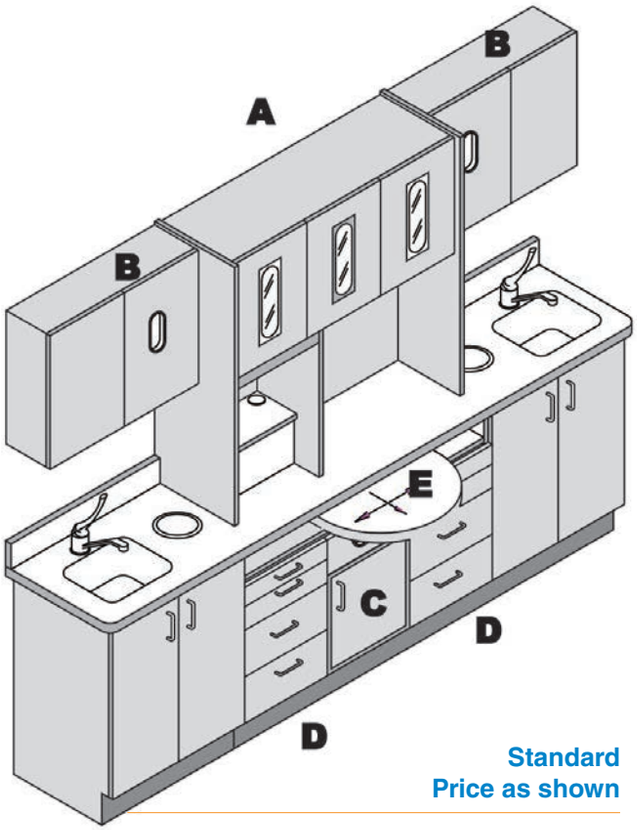

Standard Price as shown

12 O'Clock Treatment, IP-RSU-96

Description	Part Number
12 o'clock Treatment Standard	IP-RSU-96

Dimensions	In Inches
Width	96"
Height	75"
Countertop Height	33 1/2"
Depth	22" (@ c'top)

Features

Includes Solid Surface, Soft Close Doors and Drawers

12 O'clock treatment center and two wash stations

A 12 O'clock upper cabinet with fully adjustable tub/tray rack, two adjustable shelves (Accommodates most manufacturer's tub sizes)

B Two upper cabinets with glove and cup/towel dispensers

C One 15" Nitrous cabinet with retracting door

D Two base cabinets with four drawers each

E Sliding/pullout work surface

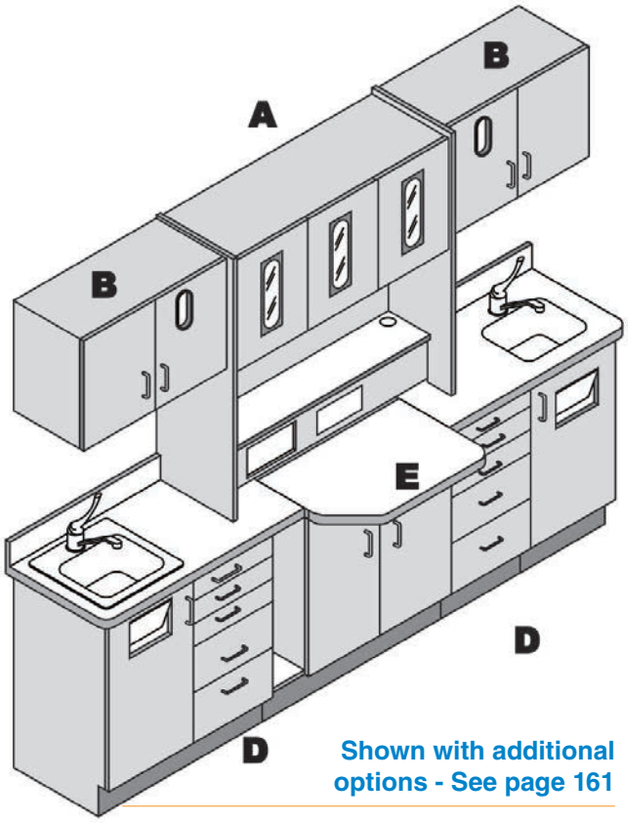

Shown with additional options - See page 161

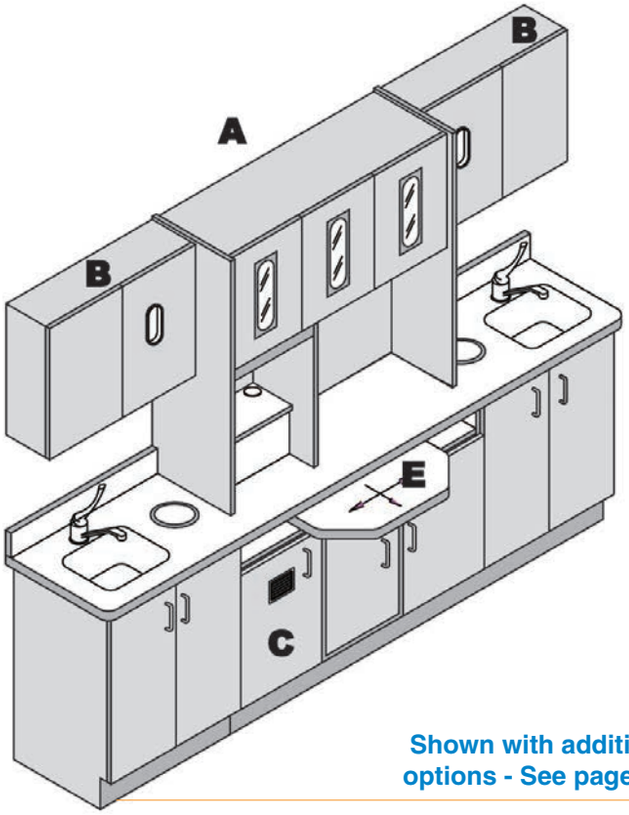

Shown with additional options - See page 161

Forest Packages
Chairs and Stools
Lights and Monitor Mounts
7000 Series
Delivery Systems
Simplified
Factory Options and Parts
General Information
Equipment Warranty
Radiance Operatory
Imagine + Operatory
Operatory Mobile
Sterilization Centers
Orthodontic Cabinetry
Reception/Front Desk Cabinetry
Color Options
Cabinet Warranty
Compressors
Dry Vacuums
Tanks
Wet Vacuums
Utility Room Accessories
Utility Warranty

IP-RRSU-96

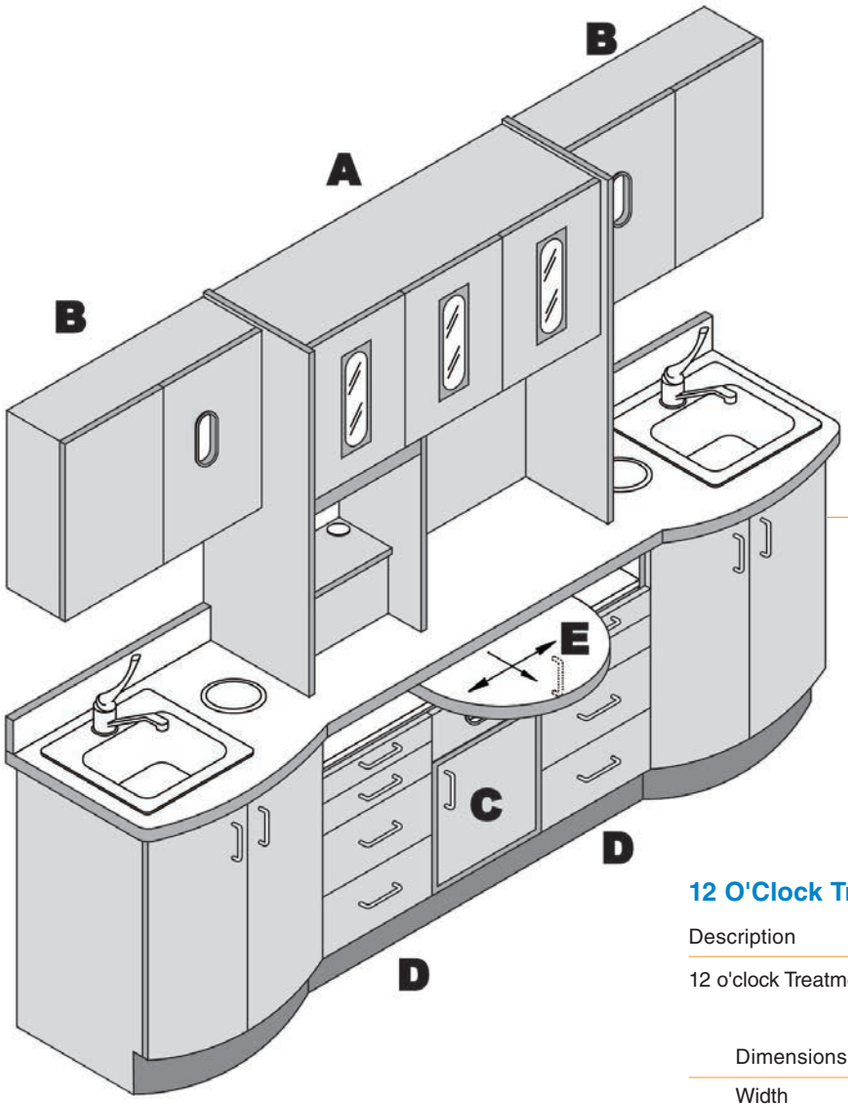

IP-RRSU Standard

12 O'Clock Treatment, IP-RRSU-96

Description	Part Number
12 o'clock Treatment Standard	IP-RRSU-96

Dimensions	In Inches
Width	96"
Height	75"
Countertop Height	33 1/2"
Depth	22" (@ c'top)

Features

Includes Solid Surface, Soft Close Doors and Drawers

12 O'clock treatment center and two wash stations

A 12 O'clock upper cabinet with fully adjustable tub/tray rack, two adjustable shelves (Accommodates most manufacturer's tub sizes)

B Two upper cabinets with glove and cup/towel dispensers

C One 15" Nitrous cabinet with retracting door

D Two base cabinets with four drawers each

E Sliding/pullout work surface

Forest Packages
Chairs and Stools
Lights and Monitor Mounts
7000 Series
Delivery Systems
Simplified
Factory Options and Parts
General Information
Equipment Warranty
Radiance Operatory
Imagine + Operatory
Operatory Mobile
Sterilization Centers
Orthodontic Cabinetry
Reception/Front Desk Cabinetry
Color Options
Cabinet Warranty
Compressors
Dry Vacuums
Tanks
Wet Vacuums
Utility Room Accessories
Utility Warranty

IP-RSU-96

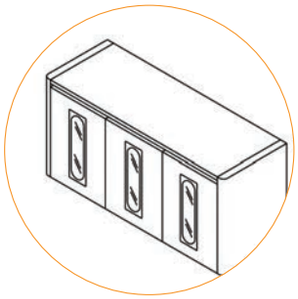

IP-GDI

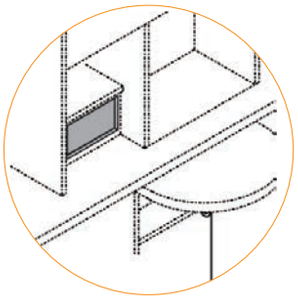

IP-CO/COMM

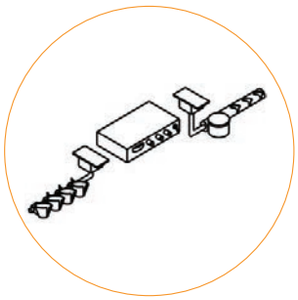

IP-UCMC

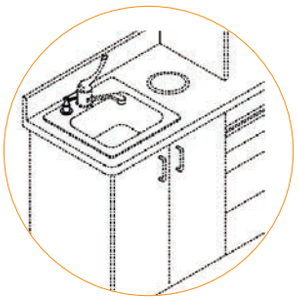

IP-SD

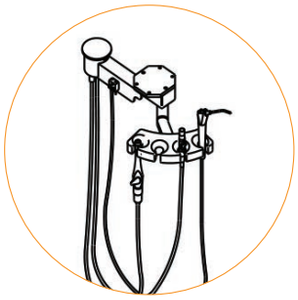

IP-AVP

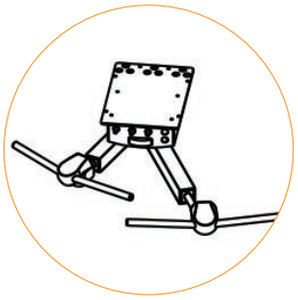

IP-LRU

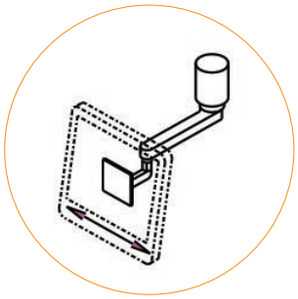

IP-SMM

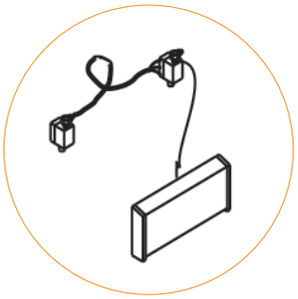

IP-TMC

12 O'Clock Treatment, 12T-HT

Description	Part Number
12 o'clock Rear Support	IP-RSU-96

Select Options

Description	Part Number
Assistant's Vacuum Package	IP-AVP
Nitrous Flow Meter	IP-CO/COMM
Glass Door Insert, in laminate door cost per door	IP-GDI
Left/Right Dual Purpose Arm & Instrumentation	IP-LRU
Soap Dispenser	IP-SD-C
Sliding monitor mount	IP-SMM
Single Tapmaster Foot Control	IP-TMC
Delivery System, beneath shelf mount	MT600BS
Delivery System, top shelf mount	MT600TS

Forest Packages
Chairs and Stools
Lights and Monitor Mounts
7000 Series
Delivery Systems
Simplified
Factory Options and Parts
General Information
Equipment Warranty
Radiance Operatory
Imagine + Operatory
Operatory Mobile
Sterilization Centers
Orthodontic Cabinetry
Reception/Front Desk Cabinetry
Color Options
Cabinet Warranty
Compressors
Dry Vacuums
Tanks
Wet Vacuums
Utility Room Accessories
Utility Warranty

IP-LW-12T and IP-LW-12B

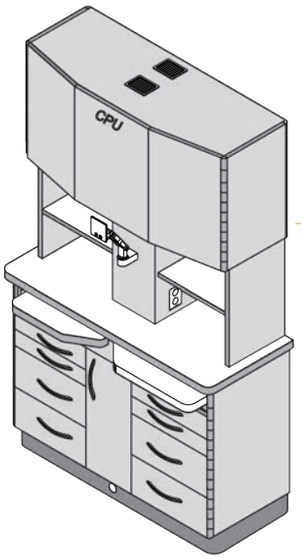

IP-LW-12T
Standard Non Pass-Thru

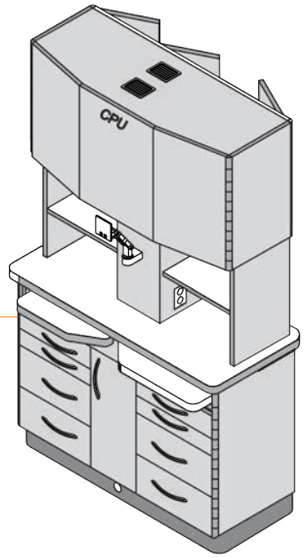

IP-LW-12T-PT
Standard Pass-Thru

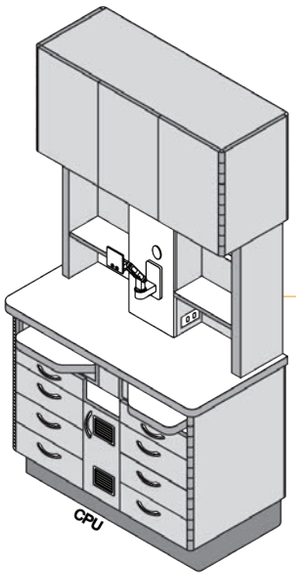

IP-LW-12B
Standard Non Pass-Thru

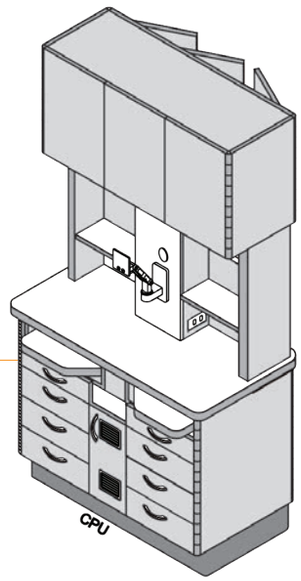

IP-LW-12B-PT
Standard Pass-Thru

12 O'Clock Treatment

Description	Part Number
12 O'clock Dual Pullout	IP-LW-12T
12 O'clock Dual Pullout Pass Thru	IP-LW-12T-PT
12 O'clock Dual Pullout	IP-LW-12B
12 O'clock Dual Pullout Pass Thru	IP-LW-12B-PT

Dimensions	In Inches
Width	43 1/4"
Height	80"
Countertop Height	33"
Depth	22" - 23" (@ c'top)

Features

- Includes 1" Solid Surface Top, Soft Close Doors and Drawers
- Upper cabinet with fully adjustable tub/tray racks
- Task lighting and 20amp outlet
- CPU Storage in center upper cabinet
- Two pullout work surfaces
- ICW monitor mount
- Separate base with leveling feet
- Center panel for monitor

IP-LW-12T and IP-LW-12T-PT (additional features)

- Small equipment compartment
- Cabinet for clean water system/nitrous

IP-LW-12B and IP-LW-12B-PT (additional features)

- Drawers on doctor and assistant side

Forest Packages
Chairs and Stools
Lights and Monitor Mounts
7000 Series
Delivery Systems
Simplified
Factory Options and Parts
General Information
Equipment Warranty
Radiance Operatory
Imagine + Operatory
Operatory Mobile
Sterilization Centers
Orthodontic Cabinetry
Reception/Front Desk Cabinetry
Color Options
Cabinet Warranty
Compressors
Dry Vacuums
Tanks
Wet Vacuums
Utility Room Accessories
Utility Warranty

IP-LW-12T and IP-LW-12B

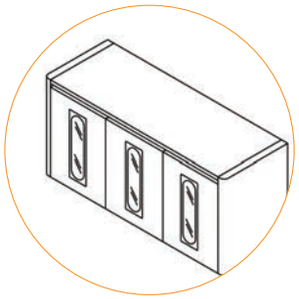

IP-GDI

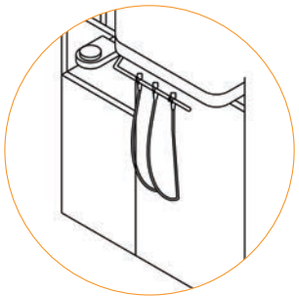

IP-SPLIT VAC

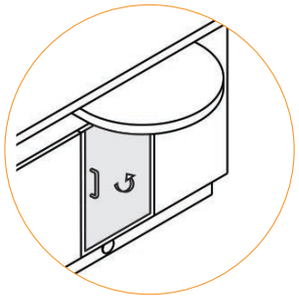

IP-RDS

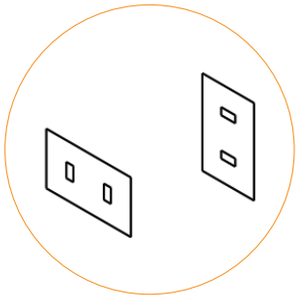

IP-USB HUB

12 O'Clock Treatment

Description	Part Number
12 O'clock Dual Pullout	IP-LW-12T
12 O'clock Dual Pullout Pass Thru	IP-LW-12T-PT
12 O'clock Dual Pullout	IP-LW-12B
12 O'clock Dual Pullout Pass Thru	IP-LW-12B-PT

Select Options

Description	Part Number
Glass door inserts, per door	IP-GDI
USB Hub	IP-USBHUB

Options for IP-LW12T AND IP-LW12T-PT ONLY

Retracting nitrous door	IP-RDS
X-ray shielding for non pass thru cabinet	IP-12T/XRS

Forest Packages
Chairs and Stools
Lights and Monitor Mounts
7000 Series
Delivery Systems
Simplified
Factory Options and Parts
General Information
Equipment Warranty
Radiance Operatory
Imagine + Operatory
Operatory Mobile
Sterilization Centers
Orthodontic Cabinetry
Reception/Front Desk Cabinetry
Color Options
Cabinet Warranty
Compressors
Dry Vacuums
Tanks
Wet Vacuums
Utility Room Accessories
Utility Warranty

Imagine +

Operatory Side Modules

Forest Packages
Chairs and Stools
Lights and Monitor Mounts
7000 Series
Delivery Systems
Simplified
Factory Options and Parts
General Information
Equipment Warranty
Radiance Operatory
Imagine + Operatory
Operatory Mobile
Sterilization Centers
Orthodontic Cabinetry
Reception/Front Desk Cabinetry
Color Options
Cabinet Warranty
Compressors
Dry Vacuums
Tanks
Wet Vacuums
Utility Room Accessories
Utility Warranty

IP-AM-55L and IP-AM-55R

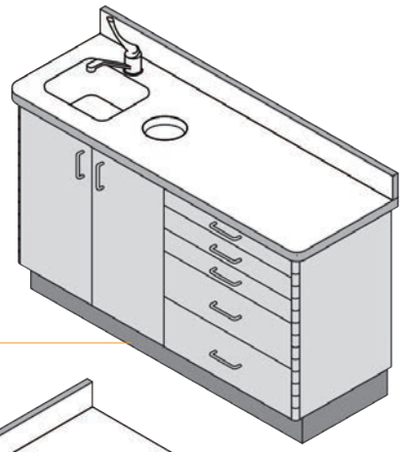

IP-AM-55L
Left Side

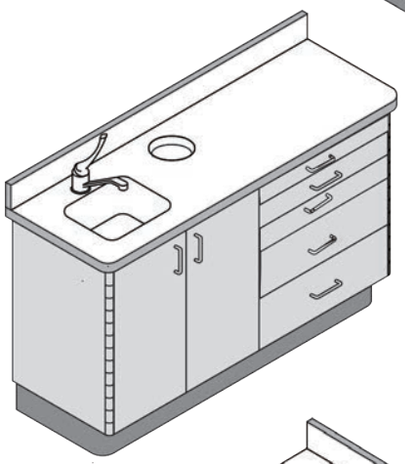

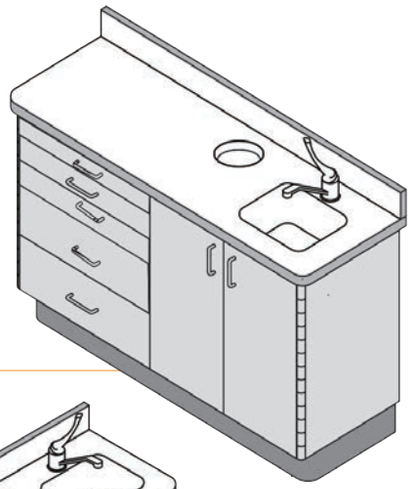

IP-AM-55R
Right Side

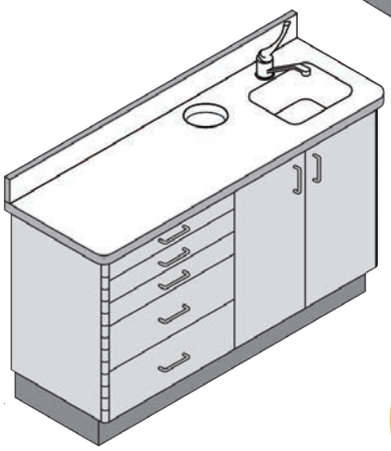

Assistants Side Cabinets

Description	Part Number
Assistants Side Cabinet (Sink on Left Side)	IP-AM-55L
Assistants Side Cabinet (Sink on Right Side)	IP-AM-55R

Select Options

Description	Part Number
15x15 S/S sink w/SL faucet	IP-1-570
Flip down drawer	IP-FDD
Keyboard (in lieu of top drawer)	IP-KB
Porcelain sink upgrade (white)	IP-PS/W
Soap dispenser	IP-SD
Tapmaster foot control	IP-TMC

Select Countertop Options

Select Colors

Countertop: _____
Cabinets: _____
Accent: _____
PVC: _____
Base: _____
Pulls: _____
Sink Right of Left _____
Cabinet TOTAL: $ _____

Dimensions	In Inches
Length	55"
Depth	19"
Height	33 1/2"

Features

- Includes Solid Surface and Top and Tapmaster
- Drawer cabinet (standard) (3)3 5/8' (1)7" (1)8 1/4"
- Waste compartment with 5" molded countertop drop and 36 quart waste container
- Removable accent panels
- Separate base with leveling feet
- Soft Close doors and drawers
- 1" Solid Surface top with undermount sink

IP-SD

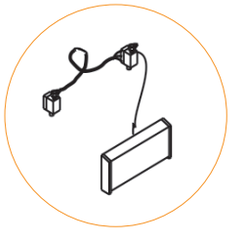

IP-TMC

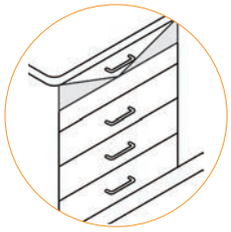

IP-FDD

IP-KB

Forest Packages
Chairs and Stools
Lights and Monitor Mounts
7000 Series
Delivery Systems
Simplified
Factory Options and Parts
General Information
Equipment Warranty
Radiance Operatory
Imagine + Operatory
Operatory Mobile
Sterilization Centers
Orthodontic Cabinetry
Reception/Front Desk Cabinetry
Color Options
Cabinet Warranty
Compressors
Dry Vacuums
Tanks
Wet Vacuums
Utility Room Accessories
Utility Warranty

IP-AMR-56L and IP-AMR-56R

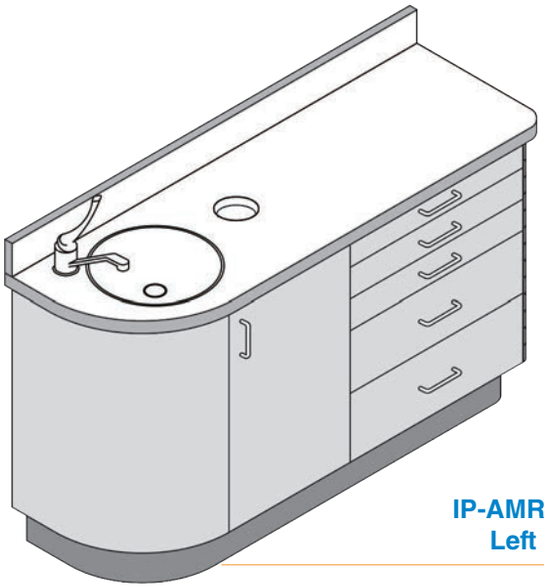

IP-AMR-56L
Left Side

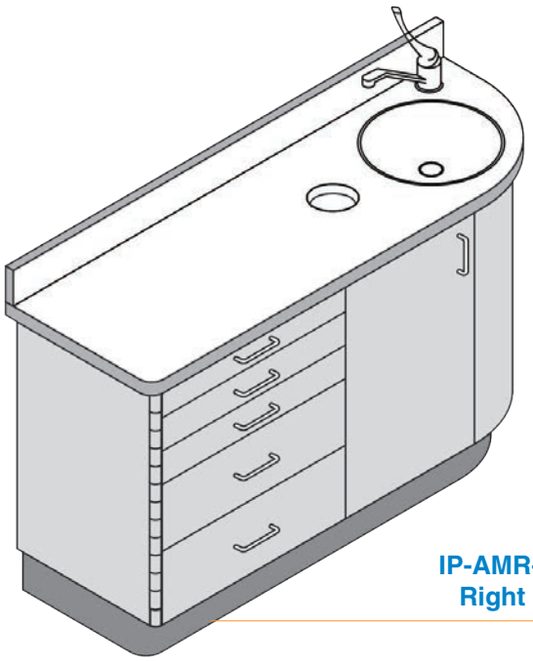

IP-AMR-56R
Right Side

Rounded Assistants Side Cabinets

Description	Part Number
Assistants Module with Round End (Sink on Left Side)	IP-AM-55L
Assistants Module with Round End (Sink on Right Side)	IP-AM-55R

Select Options

Description	Part Number
13” Round sink w/SL faucet	IP-DI-13
Flip down drawer	IP-FDD
Keyboard (in lieu of top drawer)	IP-KB
Soap dispenser	IP-SD
Tapmaster foot control	IP-TMC

Select Countertop Options

Select Colors

Countertop: _____
Cabinets: _____
Accent: _____
PVC: _____
Base: _____
Pulls: _____
Sink Right of Left _____
Cabinet TOTAL: $ _____

Dimensions	In Inches
Length	56"
Depth	19"
Height	33 1/2"

Features

- Includes Solid Surface and Top and Tapmaster
- Drawer cabinet (standard) (3)3 5/8’ (1)7” (1)8 1/4"
- Waste compartment with 5” molded countertop drop and 36 quart waste container
- Stainless steel sink and faucet
- Removable accent panels
- Separate base with leveling feet
- Soft Close doors and drawers
- 1" Solid Surface top with undermount sink

IP-SD

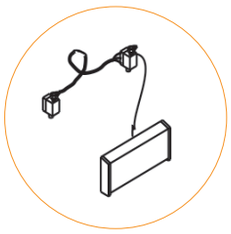

IP-TMC

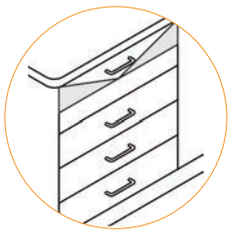

IP-FDD

IP-KB

Forest Packages
Chairs and Stools
Lights and Monitor Mounts
7000 Series
Delivery Systems
Simplified
Factory Options and Parts
General Information
Equipment Warranty
Radiance Operatory
Imagine + Operatory
Operatory Mobile
Sterilization Centers
Orthodontic Cabinetry
Reception/Front Desk Cabinetry
Color Options
Cabinet Warranty
Compressors
Dry Vacuums
Tanks
Wet Vacuums
Utility Room Accessories
Utility Warranty

IP-DM5-78L and IP-DM5-78R

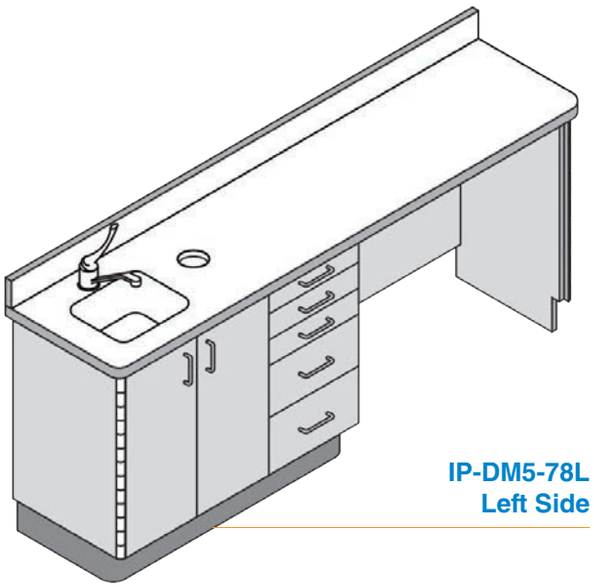

IP-DM5-78L
Left Side

IP-DM5-78R
Right Side

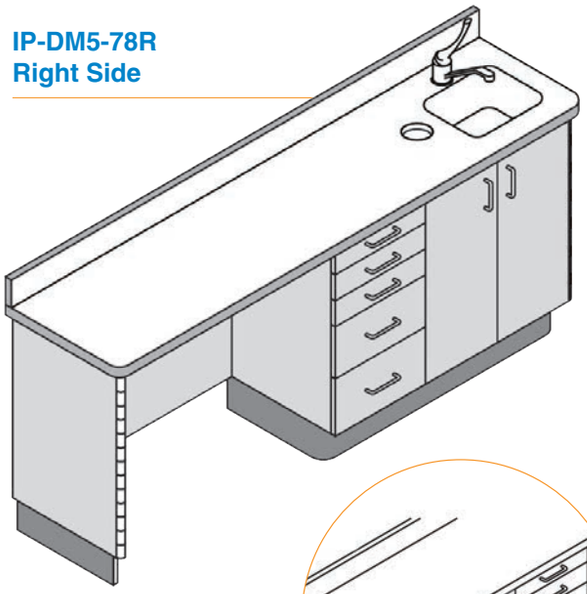

IP-DRW/DEL

Doctor's Side Delivery Cabinets

Description	Part Number
With Tapmaster (Sink on Left Side)	IP-DM5-78L
With Tapmaster (Sink on Right Side)	IP-DM5-78R

Select Options

Description	Part Number
Flip down drawer	IP-FDD
Keyboard (in lieu of top drawer)	IP-KB
Drawer over delivery system	IP-DRW/DEL
Side delivery unit	3235

Select Sink/Plumbing Options

15”x15” S/S sink w/SL faucet	IP-1-570
Tapmaster foot control	IP-TMC
Soap Dispenser	IP-SD

Select Colors

Countertop: _____
Cabinets: _____
Accent: _____
PVC: _____
Base: _____
Pulls: _____
Sink Right of Left _____
Cabinet TOTAL: $ _____

Dimensions	In Inches
Length	78"
Depth	19"
Height	33 1/2"
Open Area	34"

Features

- Includes Solid Surface and Top and Tapmaster
- Drawer cabinet (standard) (3)3 5/8’ (1)7” (1)8 1/4"
- Waste compartment with 5” molded countertop drop and 36 quart waste container
- Reinforced rear panel for delivery system mounting
- Removable bottom for utility connections
- Stainless steel sink and faucet
- Removable accent panels
- Separate base with leveling feet
- 1" Solid Surface top with undermount sink

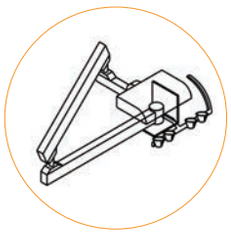

3235

IP-SD

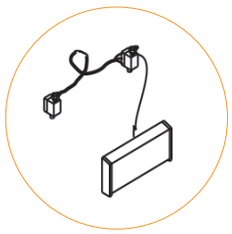

IP-TMC

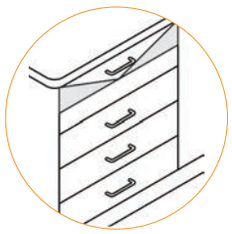

IP-FDD

IP-KB

Forest Packages
Chairs and Stools
Lights and Monitor Mounts
7000 Series
Delivery Systems
Simplified
Factory Options and Parts
General Information
Equipment Warranty
Radiance Operatory
Imagine + Operatory
Operatory Mobile
Sterilization Centers
Orthodontic Cabinetry
Reception/Front Desk Cabinetry
Color Options
Cabinet Warranty
Compressors
Dry Vacuums
Tanks
Wet Vacuums
Utility Room Accessories
Utility Warranty

IP-DM5R-82L and IP-DM5R-82R

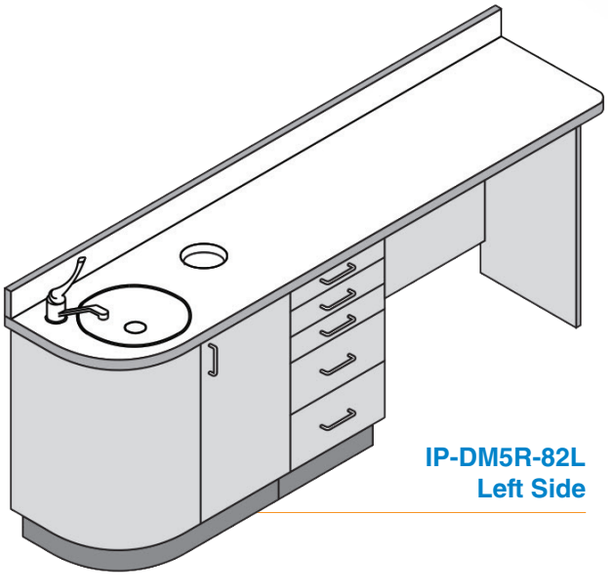

IP-DM5R-82L
Left Side

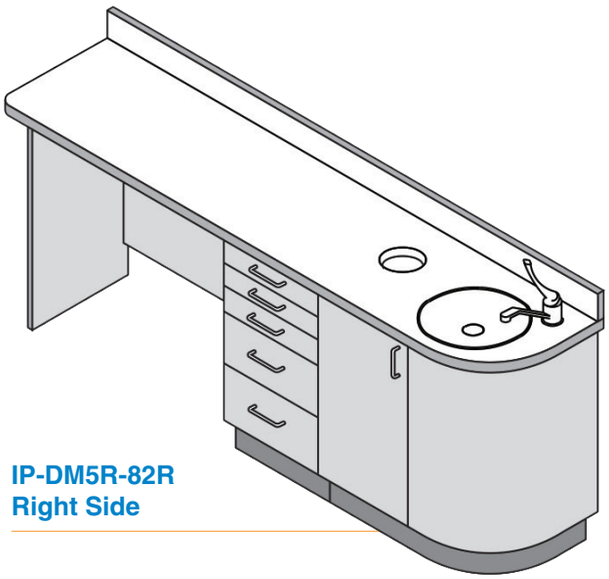

IP-DM5R-82R
Right Side

Rounded Doctor's Side Delivery Cabinets

Description	Part Number
With Tapmaster (Sink on Left Side)	IP-DM5R-82L
With Tapmaster (Sink on Right Side)	IP-DM5R-82R

Select Options

Description	Part Number
15”x15” S/S sink w/SL faucet	IP-1-570
Drawer over delivery system	IP-DRW/DEL
Flip down drawer	IP-FDD
Pullout writing surface	IP-POWS
Soap dispenser	IP-SD
Side Delivery Unit	3235
Tapmaster foot control	IP-TMC

Select Colors

Countertop: _____
Cabinets: _____
Accent: _____
PVC: _____
Base: _____
Pulls: _____
Sink Right of Left _____
Cabinet TOTAL: $ _____

Dimensions	In Inches
Length	82"
Depth	19"
Height	33 1/2"
Open Area	34"

Features

- Includes Solid Surface and Top and Tapmaster
- Drawer cabinet (standard) (3)3 5/8’ (1)7” (1)8 1/4"
- Waste compartment with 5” molded countertop drop and 36 quart waste container
- Reinforced rear panel for delivery system mounting
- Removable bottom for utility connections
- Stainless steel sink and faucet
- Removable accent panels
- Separate base with leveling feet
- 1" Solid Surface top with undermount sink

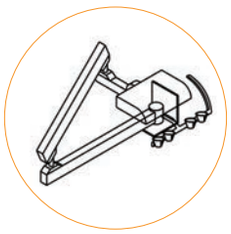

3235

IP-SD

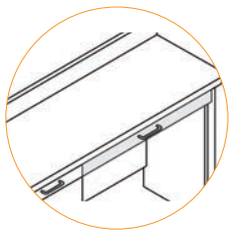

IP-DRW/DEL

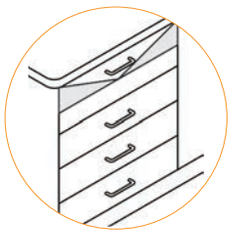

IP-FDD

Forest Packages
Chairs and Stools
Lights and Monitor Mounts
7000 Series
Delivery Systems
Simplified
Factory Options and Parts
General Information
Equipment Warranty
Radiance Operatory
Imagine + Operatory
Operatory Mobile
Sterilization Centers
Orthodontic Cabinetry
Reception/Front Desk Cabinetry
Color Options
Cabinet Warranty
Compressors
Dry Vacuums
Tanks
Wet Vacuums
Utility Room Accessories
Utility Warranty

IP-DM1-78L and IP-DM1-78R

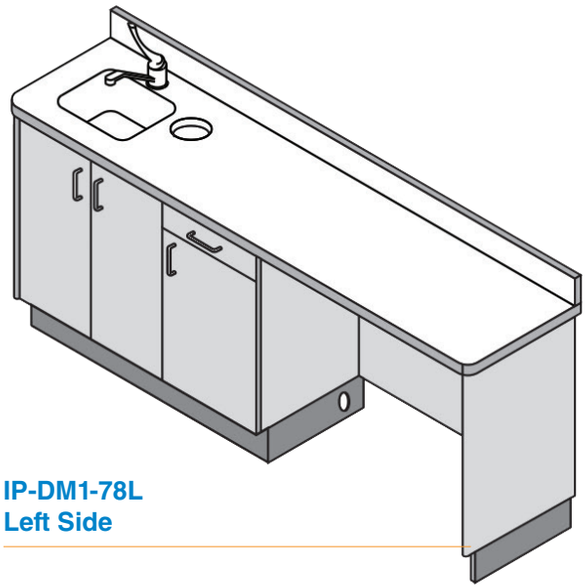

IP-DM1-78L
Left Side

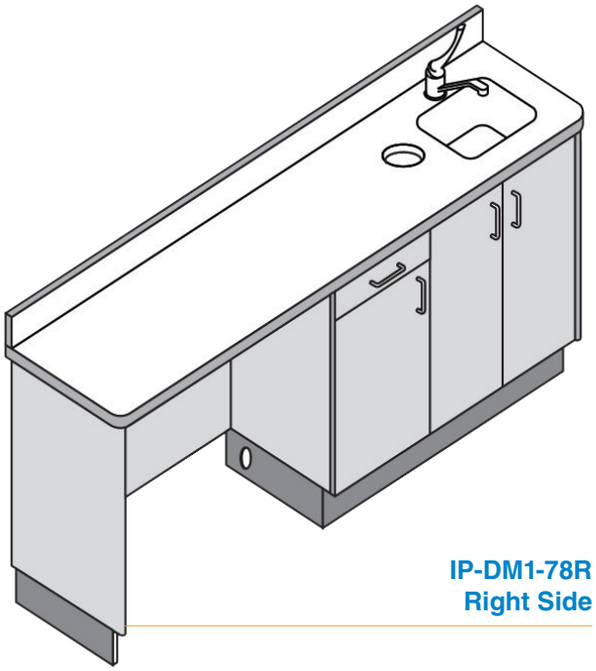

IP-DM1-78R
Right Side

Doctor's Side Delivery Cabinets

Description	Part Number
With Tapmaster (Sink on Left Side)	IP-DM1-78L
With Tapmaster (Sink on Right Side)	IP-DM1-78L

Select Options

Description	Part Number
15”x15” S/S sink w/SL faucet	IP-1-570
Soap dispenser	IP-SD
Tapmaster foot control	IP-TMC

Select Colors

Countertop: _____
Cabinets: _____
Accent: _____
PVC: _____
Base: _____
Pulls: _____
Sink Right of Left _____
Cabinet TOTAL: $ _____

Dimensions	In Inches
Length	78"
Depth	19"
Height	33 1/2"
Open Area	34"

Features

- Includes Solid Surface and Top and Tapmaster
- One 3 5/8” drawer over delivery system
- Storage cabinet with two adjustable shelves
- Waste compartment with 5” molded countertop drop and 36 quart waste container
- Reinforced rear panel for delivery system mounting
- Removable bottom for utility connections
- Stainless steel sink and faucet
- Removable accent panels
- Separate base with leveling feet
- 1" Solid Surface top with undermount sink

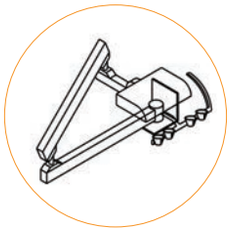

3235

IP-SD

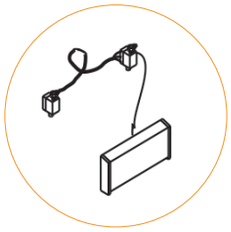

IP-TMC

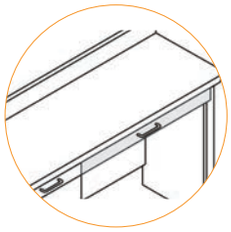

IP-DRW/DEL

Forest Packages
Chairs and Stools
Lights and Monitor Mounts
7000 Series
Delivery Systems
Simplified
Factory Options and Parts
General Information
Equipment Warranty
Radiance Operatory
Imagine + Operatory
Operatory Mobile
Sterilization Centers
Orthodontic Cabinetry
Reception/Front Desk Cabinetry
Color Options
Cabinet Warranty
Compressors
Dry Vacuums
Tanks
Wet Vacuums
Utility Room Accessories
Utility Warranty

IP-DM1R-82L and IP-DM1R-82R

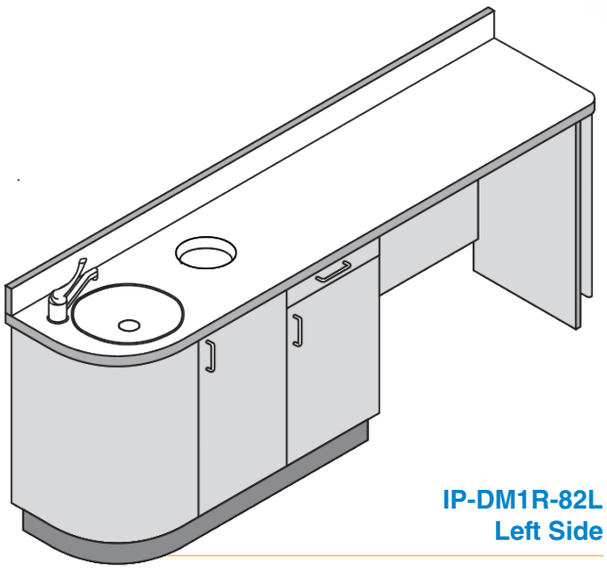

IP-DM1R-82L
Left Side

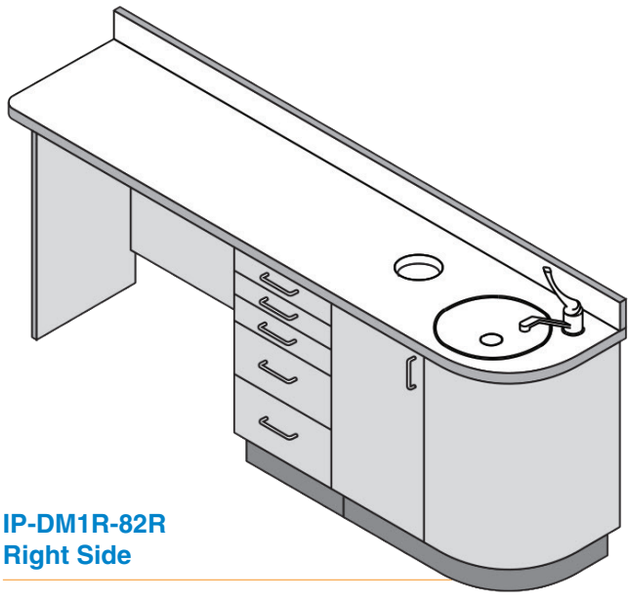

IP-DM1R-82R
Right Side

Rounded Doctor's Side Delivery Cabinets

Description	Part Number
With Tapmaster (Sink on Left Side)	IP-DM1R-82L
With Tapmaster (Sink on Right Side)	IP-DM1R-82L

Select Options

Description	Part Number
15”x15” S/S sink w/SL faucet	IP-1-570
Pullout work surface	IP-POWS
Soap dispenser	IP-SD-C
Side Delivery Unit	3235
Tapmaster foot control	IP-TMC

Select Colors

Countertop: _____
Cabinets: _____
Accent: _____
PVC: _____
Base: _____
Pulls: _____
Sink Right of Left _____
Cabinet TOTAL: $ _____

Dimensions	In Inches
Length	82"
Depth	19"
Height	33 1/2"
Open Area	34"

Features

- Includes Solid Surface and Top and Tapmaster
- One 3 5/8” drawer over delivery system
- Storage cabinet with two adjustable shelves
- Waste compartment with 5” molded countertop drop and 36 quart waste container
- Reinforced rear panel for delivery system mounting
- Removable bottom for utility connections
- Stainless steel sink and faucet
- Removable accent panels
- Separate base with leveling feet
- 1" Solid Surface top with undermount sink

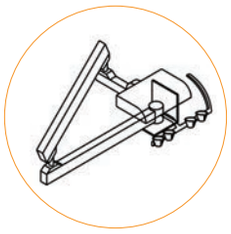

3235

IP-SD

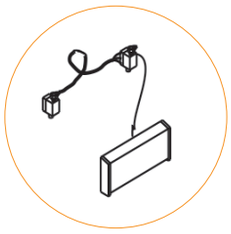

IP-TMC

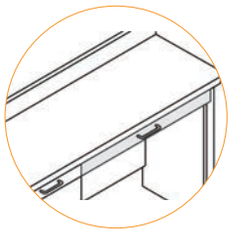

IP-DRW/DEL

Forest Packages
Chairs and Stools
Lights and Monitor Mounts
7000 Series
Delivery Systems
Simplified
Factory Options and Parts
General Information
Equipment Warranty
Radiance Operatory
Imagine + Operatory
Operatory Mobile
Sterilization Centers
Orthodontic Cabinetry
Reception/Front Desk Cabinetry
Color Options
Cabinet Warranty
Compressors
Dry Vacuums
Tanks
Wet Vacuums
Utility Room Accessories
Utility Warranty

IP-OC-42SL and IP-OC-42SR

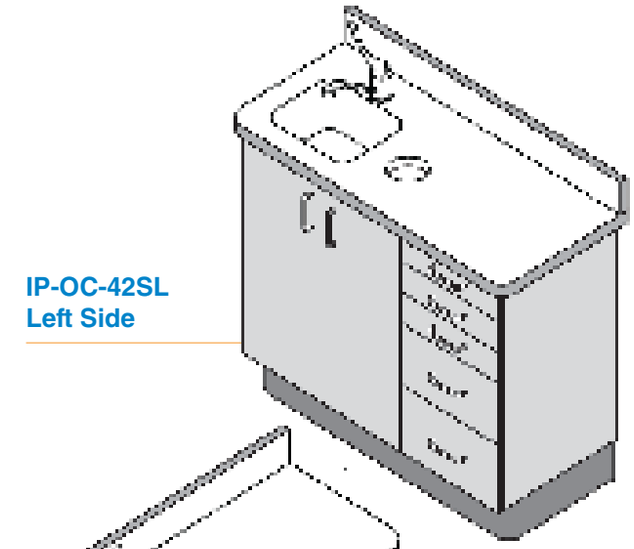

IP-OC-42SL
Left Side

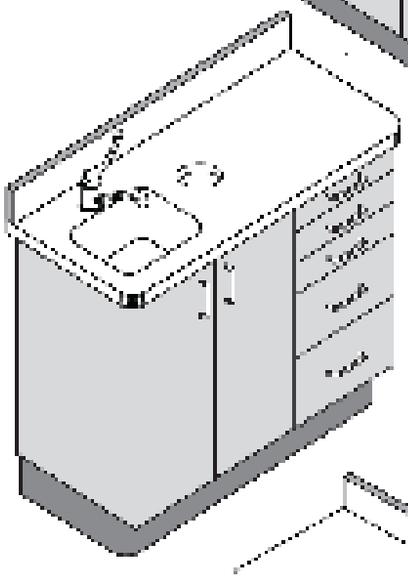

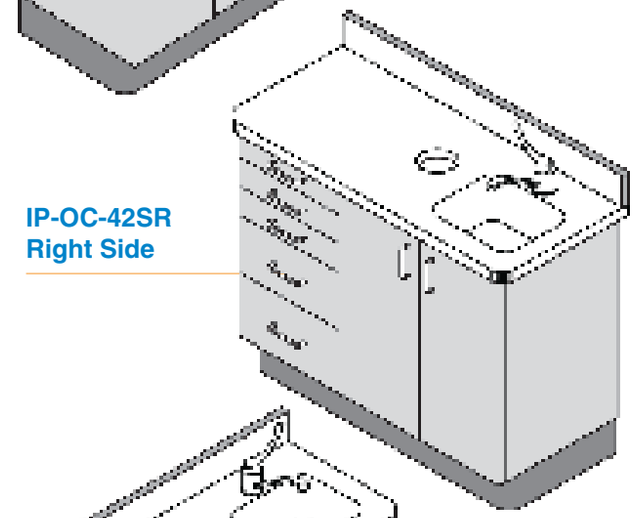

IP-OC-42SR
Right Side

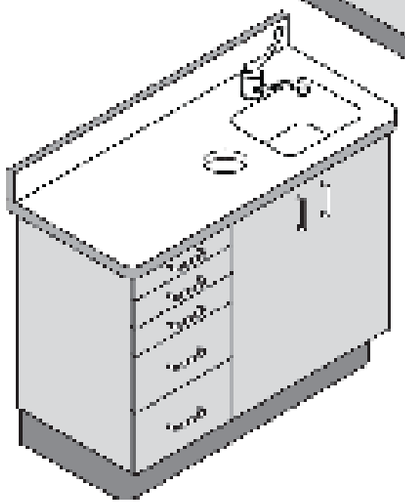

Operatory Side Sink Cabinets

Description	Part Number
Side Sink Cabinets with Tapmaster (Left Side)	IP-OC-42SL
Side Sink Cabinets with Tapmaster (Right Side)	IP-OC-42SR

Select Options

Description	Part Number
15”x15” S/S sink w/SL faucet	IP-1-570
Flip down drawer	IP-FDD
Soap dispenser	IP-SD-C
Tapmaster foot control	IP-TMC
Lower accent panel (each)	IP-LAP

Select Colors

Countertop: _____
Cabinets: _____
PVC: _____
Base: _____
Pulls: _____
Sink Right of Left _____
Cabinet TOTAL: $ _____

Dimensions	In Inches
Length	42"
Depth	19"
Height	33 1/2"
Shipping Weight	250 lb.

Features

Includes 1" Solid Surface Top and Tapmaster Foot Control
Drawer cabinet (standard) (3)3 5/8” (1)7” (1)8 1/4"
Waste compartment with 5” molded countertop drop and 21 quart waste container
Stainless steel under mount sink and faucet
Solid surface top

IP-SD-C

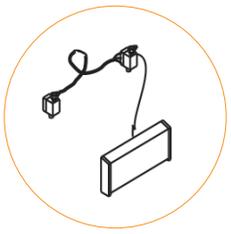

IP-TMC

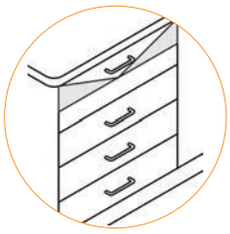

IP-FDD

Forest Packages
Chairs and Stools
Lights and Monitor Mounts
7000 Series
Delivery Systems
Simplified
Factory Options and Parts
General Information
Equipment Warranty
Radiance Operatory
Imagine + Operatory
Operatory Mobile
Sterilization Centers
Orthodontic Cabinetry
Reception/Front Desk Cabinetry
Color Options
Cabinet Warranty
Compressors
Dry Vacuums
Tanks
Wet Vacuums
Utility Room Accessories
Utility Warranty

IP-XRPT-4853

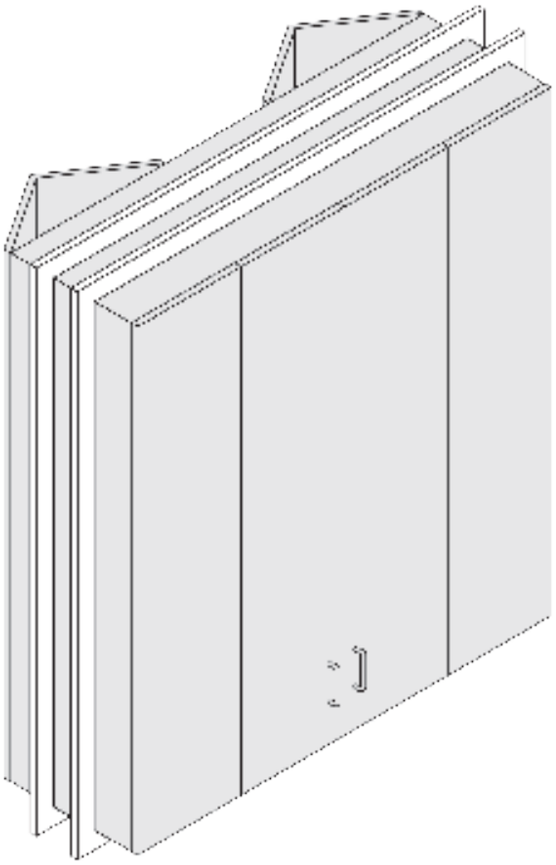

X-Ray Pass-Thru Cabinet

Description	Part Number
X-Ray Pass-Thru Cabinet	IP-XRPT-4853

Select Options

Description	Part Number
X-ray shielding	IP-XRPT-4853-01
Trim Kit, For X-ray Pass-Thru Cabinet	IP-XRPT-4853-02
Custom sizes available to fit any size rough opening or X-ray unit	
Call For Quote	

Select Colors

Cabinets: _____

PVC: _____

Pulls: _____

Cabinet TOTAL: $ _____

Features

Bi-fold doors fold flat for maximum access

All plywood construction

Double end panel for x-ray equipment mounting

Outside Dimensions	In Inches
Width	48"
Height	53"
Depth	16"

Inside Dimensions	In Inches
Width	45 3/4"
Height	51 1/2"
Depth	14"

Rough Opening Required	In Inches
Width	48 1/2"
Height	53 1/2"

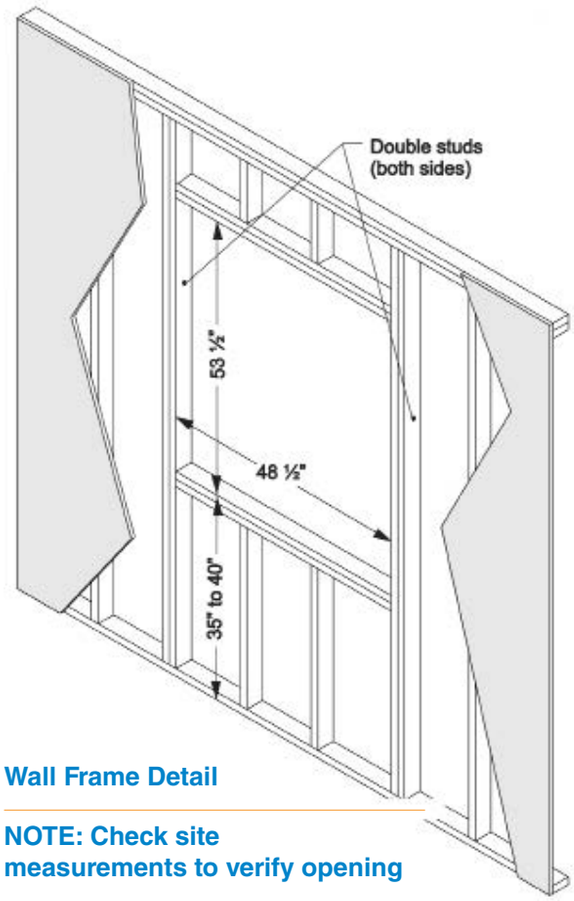

Wall Frame Detail

NOTE: Check site measurements to verify opening

Wall Opening Details

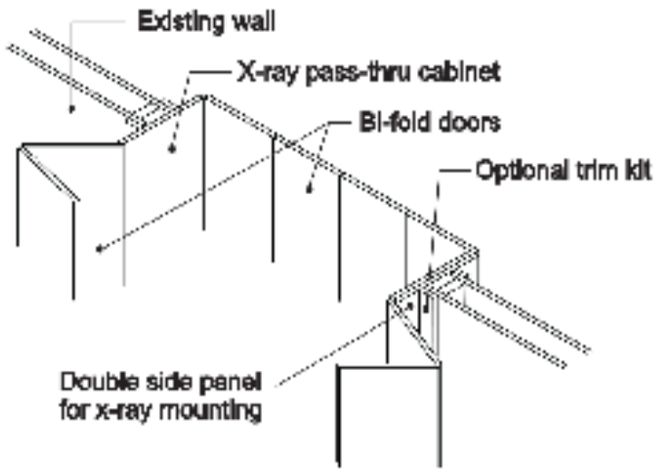

Forest Packages
Chairs and Stools
Lights and Monitor Mounts
7000 Series
Delivery Systems
Simplified
Factory Options and Parts
General Information
Equipment Warranty
Radiance Operatory
Imagine + Operatory
Operatory Mobile
Sterilization Centers
Orthodontic Cabinetry
Reception/Front Desk Cabinetry
Color Options
Cabinet Warranty
Compressors
Dry Vacuums
Tanks
Wet Vacuums
Utility Room Accessories
Utility Warranty

IP-Wash Station - 32

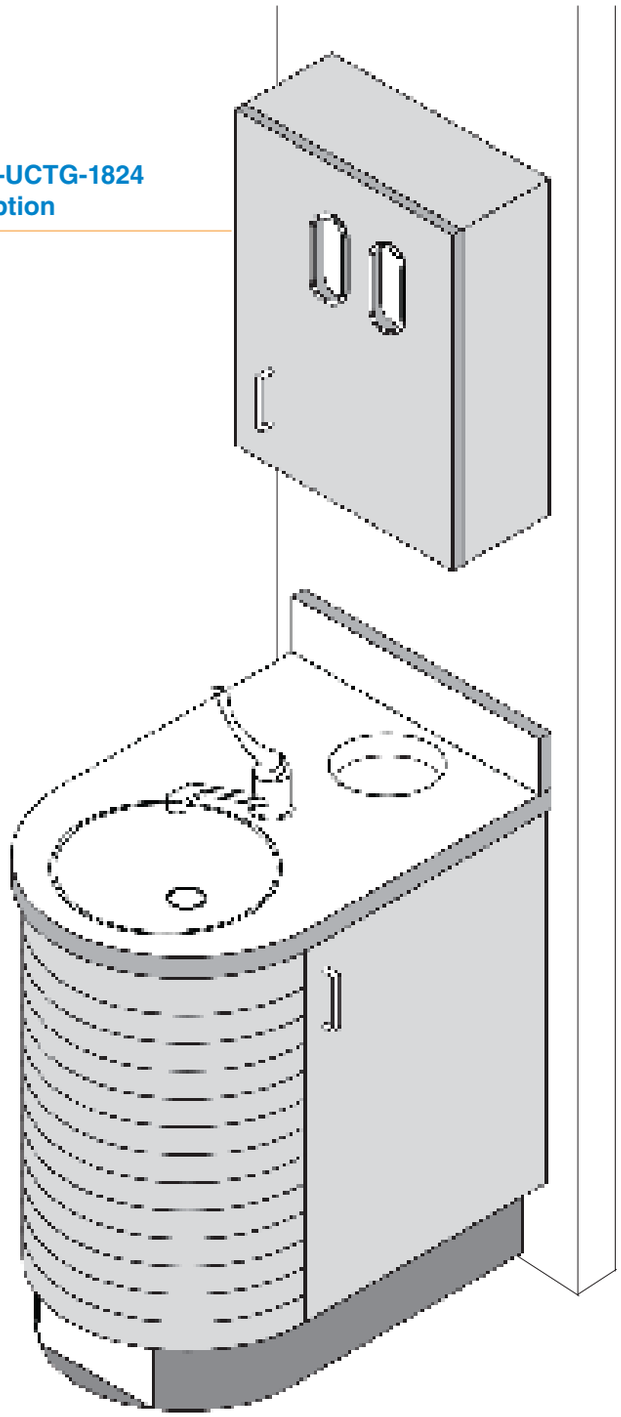

IP-UCTG-1824 Option

T Wall Sink/Glove Dispenser Cabinet

Description	Part Number
Sink Base Cabinet - 32 with solid surface top	IP-Wash Station 32
Sink Base Cabinet - 32 square sink option	Wash Station SQ

Select Options

Description	Part Number
13” Round S/S sink w/SL faucet	IP-D-13
Tapmaster foot control	IP-TMC
Soap dispenser	IP-SD-C
Glove/cup/towel upper	IP-UCTG-1284

Select Colors

Countertop: _____

Cabinet: _____

PVC: _____

Base: _____

Pulls: _____

Cabinet TOTAL: $ _____

Features

Waste compartment with 5” molded countertop drop and 36-quart waste container

Stainless steel under mount sink and faucet

Laminated top only with self-edge and loose splash

Outside Dimensions	In Inches
Length	32"
Width	21 7/8"
Height	33 1/2" c'top

IP-SD-C

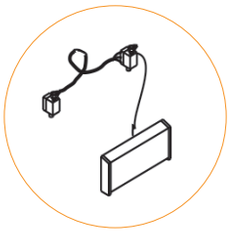

IP-TMC

Forest Packages
Chairs and Stools
Lights and Monitor Mounts
7000 Series
Delivery Systems
Simplified
Factory Options and Parts
General Information
Equipment Warranty
Radiance Operatory
Imagine + Operatory
Operatory Mobile
Sterilization Centers
Orthodontic Cabinetry
Reception/Front Desk Cabinetry
Color Options
Cabinet Warranty
Compressors
Dry Vacuums
Tanks
Wet Vacuums
Utility Room Accessories
Utility Warranty

Imagine +

Island modules

Forest Packages
Chairs and Stools
Lights and Monitor Mounts
7000 Series
Delivery Systems
Simplified
Factory Options and Parts
General Information
Equipment Warranty
Radiance Operatory
Imagine + Operatory
Operatory Mobile
Sterilization Centers
Orthodontic Cabinetry
Reception/Front Desk Cabinetry
Color Options
Cabinet Warranty
Compressors
Dry Vacuums
Tanks
Wet Vacuums
Utility Room Accessories
Utility Warranty

IP-IM-98 and IP-IMR-98, 88" High Island

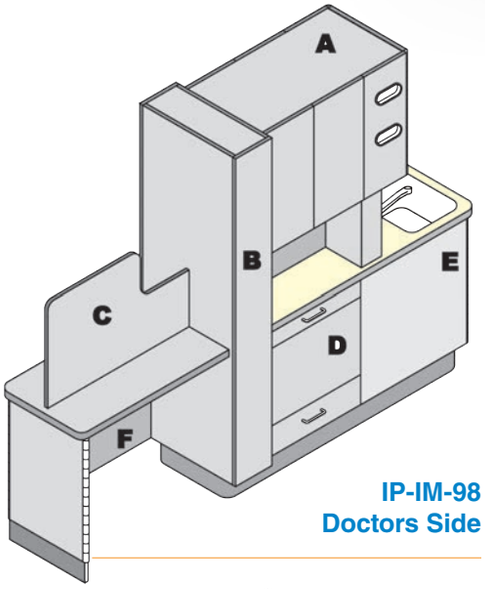

IP-IM-98
Doctors Side

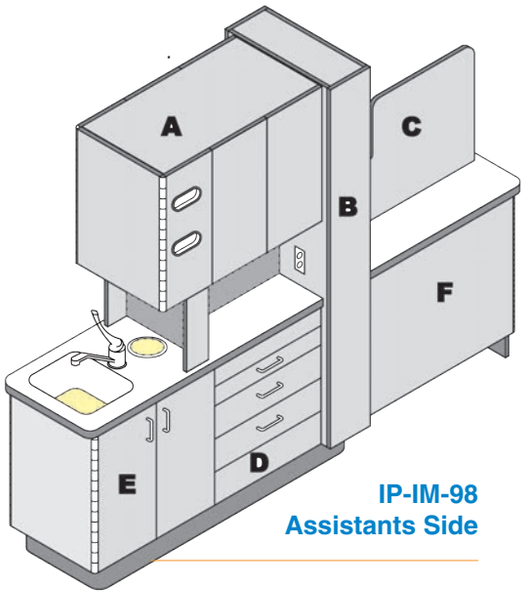

IP-IM-98
Assistants Side

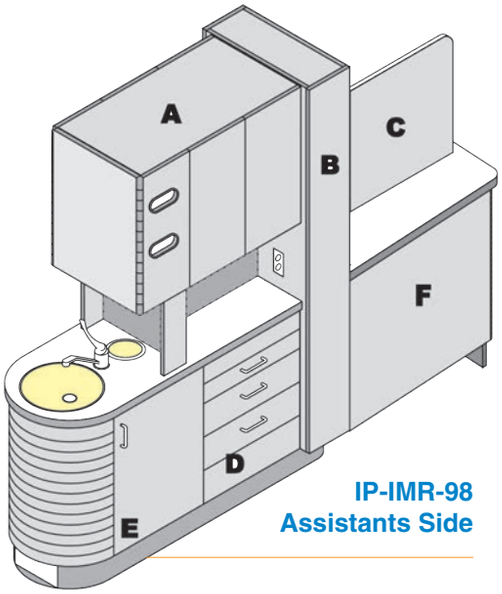

IP-IMR-98
Assistants Side

Standard Island Module

Description	Part Number
88" High Island	IP-IM-98
88" High Island Rounded Includes Solid Surface Top	IP-IMR-98

Dimensions	In Inches
Length	98 1/4"
Depth	20 1/2"
Height	98"
Countertop	33 1/2"

Features

IP-IM-98 and IP-IMR-98 Modules included in starting price $11,977.00

1" Solid Surface Top, Soft Close Drawers and Doors

A Upper pass-thru cabinet with laminate doors

B Privacy center divider with task lighting and outlets (20 amps) on Assistant's side and Doctors side

B Upper storage cabinet with adjustable shelf and cup/towel dispenser

B X-ray column is reinforced with plywood and adaptable to any X-ray and/or light mount

B Removable bottom for utility connections

B Side delivery compartment with back panel accepts most delivery systems

C Privacy panel- equipment end

D Doctor side: (2) drawers- (1)3 5/8" and (1)6 1/4"

D Assistant side: (3) drawers- (1)3 5/8" and (2)6 1/4"

E **IP-IM-98 Module:** Waste compartment with countertop drop and 36-quart waste container, Under mount stainless steel sink and faucet. Separate base with leveling feet

E **IP-IMR-98 Module:** Rounded Waste compartment with countertop drop and 36-quart waste container, Under mount stainless steel sink and faucet. Separate base with leveling feet

F Equipment end

Forest Packages
Chairs and Stools
Lights and Monitor Mounts
7000 Series
Delivery Systems
Simplified
Factory Options and Parts
General Information
Equipment Warranty
Radiance Operatory
Imagine + Operatory
Operatory Mobile
Sterilization Centers
Orthodontic Cabinetry
Reception/Front Desk Cabinetry
Color Options
Cabinet Warranty
Compressors
Dry Vacuums
Tanks
Wet Vacuums
Utility Room Accessories
Utility Warranty

IP-IMR-98 Round, 88" High Island

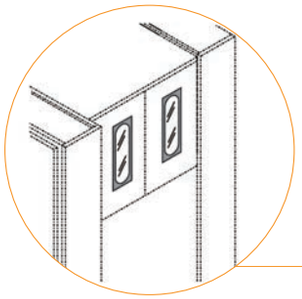

IP-GDI

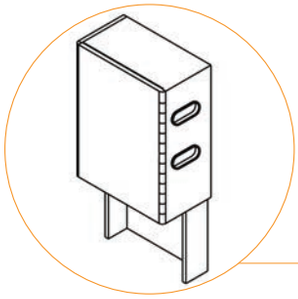

IP-GD-2

IP-SD

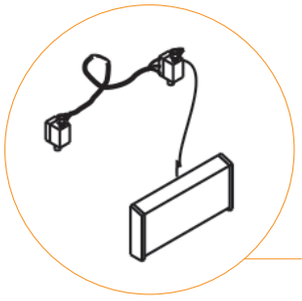

IP-TMC

IP-IMR-98 Round, Standard Island Module

Description	Part Number
88" High Island Rounded Includes Solid Surface Top	IP-IMR-98

Select Options

Description	Part Number
Glove or tissue dispenser	IP-GD-2
Glass door inserts (per door)	IP-GDI
Passthru base with drawers	IP-IM-98/BCDM
Passthru base cabinet under x-ray	IP-IM-98/BCPT
Drawer under x-ray	IP-IM-98DWR
X-ray shielding	IP-IM-98XRS
Radiance Soap dispenser (each)	IP-SD
Tapmaster foot control	IP-TMC

Select Colors

Countertop: _____

Cabinest: _____

Accent: _____

PVC: _____

Base: _____

Pulls: _____

Cabinet TOTAL: $ _____

IP-IM-98/BCDM

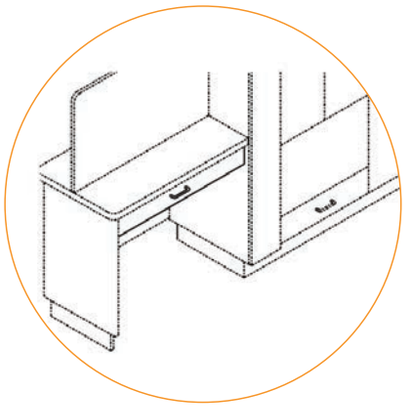

IP-IM-98/DRW

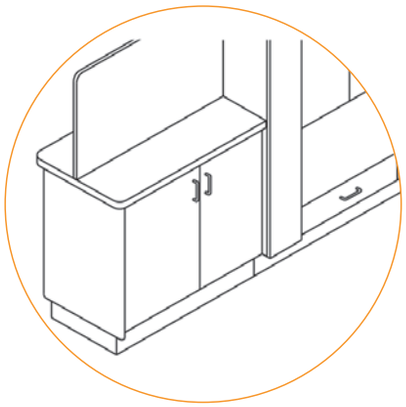

IP-IM-98/BCPT

Forest Packages
Chairs and Stools
Lights and Monitor Mounts
7000 Series
Delivery Systems
Simplified
Factory Options and Parts
General Information
Equipment Warranty
Radiance Operatory
Imagine + Operatory
Operatory Mobile
Sterilization Centers
Orthodontic Cabinetry
Reception/Front Desk Cabinetry
Color Options
Cabinet Warranty
Compressors
Dry Vacuums
Tanks
Wet Vacuums
Utility Room Accessories
Utility Warranty

IP-IMX-105 and IP-IMRX-104

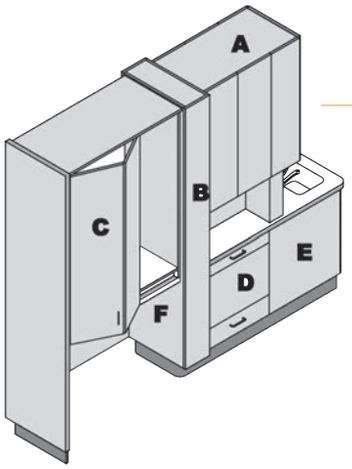

IP-IMX-105
Doctors Side

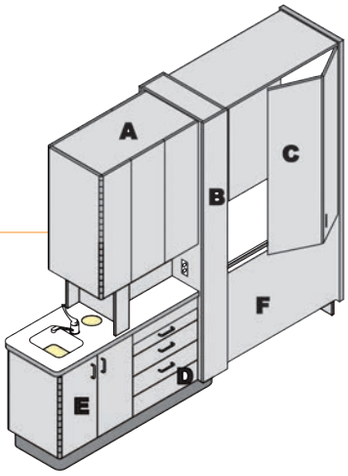

IP-IMX-105
Assistants Side

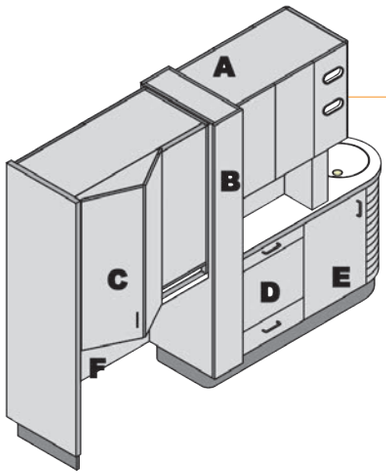

IP-IMRX-104
Doctors Side

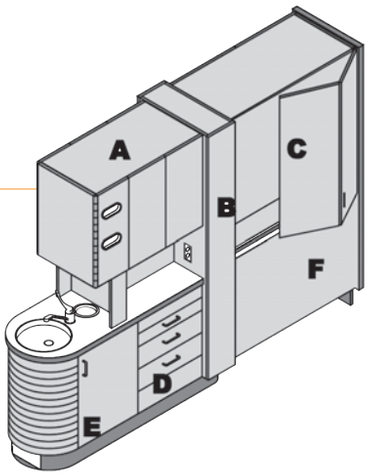

IP-IMRX-104
Assistants Side

IP-IMX-105 Island Module with X-Ray Enclosure

Description	Part Number
88" HIgh Island with Square Waste Compartment	IP-IMX-105

Dimensions	In Inches
Length	105"
Depth	20 1/2"
Height	88"
Countertop	33 1/2"

Features

IP-IMX-105 and IP-IMRX-104 Modules included in starting price

1" Solid Surface Top, Soft Close Drawers and Doors, Glove Inserts and Undermount Sink

A Upper pass-thru cabinet with laminate doors

B Privacy center divider with task lighting and outlets (20 amps) on Assistant's side and Doctor's side

B Upper storage cabinet with adjustable shelf and cup/towel dispenser

B X-ray column is reinforced with hardwood plywood and adaptable to any X-ray and/or light mount. Removable bottom for utility connections. Side delivery compartment with back panel accepts most delivery systems

C Privacy bi-fold X-Ray doors- equipment end

D Doctor side: (2) drawers- (1)3 5/8" and (1)6 1/4"

D Assistant side: (3) drawers- (1)3 5/8" and (2)6 1/4"

E **IP-IMX-105 Module:** Square Waste compartment with countertop drop and 36-quart waste container, Stainless steel under mount sink and faucet. Separate base with leveling feet

E **IP-IMRX-104 Module:** Round Waste compartment with countertop drop and 36-quart waste container, Stainless steel under mount sink and faucet. Separate base with leveling feet

F Equipment end

IP-IMRX-104 Island Module with X-Ray Enclosure

Description	Part Number
88" HIgh Island with Round Waste Compartment	IP-IMRX-104

Dimensions	In Inches
Length	104"
Depth	20 1/2"
Height	88"
Countertop	33 1/2"
X-Ray Compartment	20" x 40 5/8" (I/S)
Shipping Weight	1,080 lb.

Forest Packages
Chairs and Stools
Lights and Monitor Mounts
7000 Series
Delivery Systems
Simplified
Factory Options and Parts
General Information
Equipment Warranty
Radiance Operatory
Imagine + Operatory
Operatory Mobile
Sterilization Centers
Orthodontic Cabinetry
Reception/Front Desk Cabinetry
Color Options
Cabinet Warranty
Compressors
Dry Vacuums
Tanks
Wet Vacuums
Utility Room Accessories
Utility Warranty

IP-IMX-105 and IP-IMRX-104

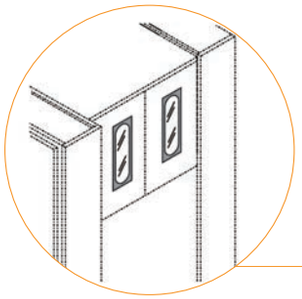

IP-GDI

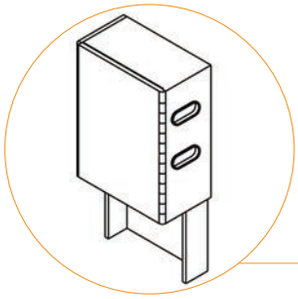

IP-GD-2

IP-SD

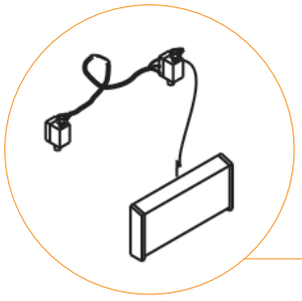

IP-TMC

IP-IMX-105 Standard Island Module with X-Ray Enclosure

Description	Part Number
Standard Island Module includes solid surface top with stainless steel under mount sink	IP-IMX-105

IP-IMRX-104 Round Island Module with X-Ray Enclosure

Description	Part Number
Round Island Module includes solid surface top with stainless steel under mount sink	IP-IMRX-104

Select Options

Description	Part Number
Soap dispenser (each)	IP-SD
Glass Door Insert, in laminate door	IP-GDI
Glove Dispenser Double	IP-GD-2
Tapmaster foot control	IP-TMC
Drawer Under X-ray	IP-IMX-105/DWR IP-IMRX-104/DRW
Add Fascia To Ceiling (up to 12")	IP-IMX-105/DWR IP-IMRX-104/FASCIA
X-ray Shielding	IP-IMX-105/XRS IP-IMRX-104/XRS
Pass Thru Base w/Drawers	IP-IMX-105/BDCM IP-IMRX-104/BDCM
Base Cabinet Under X-ray (Pass Thru)	IP-IMX-105/BCPT IP-IMRX-104/BCPT

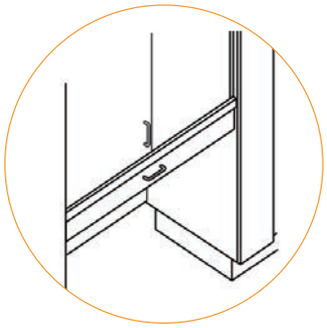

IP-IMX-105/DWR
IP-IMRX-104/DRW

IP-IM-105/BCDM

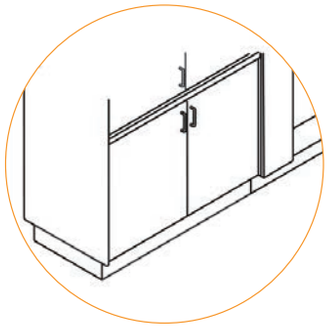

IP-IMX-105/BCPT
IP-IMRX-104/BCPT

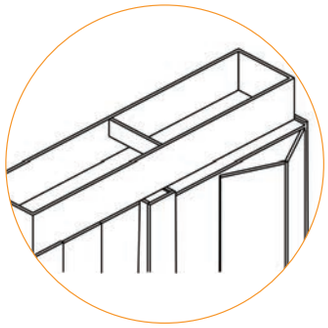

IP-IMX-105/FASCIA
IP-IMRX-104/FASCIA

Forest Packages
Chairs and Stools
Lights and Monitor Mounts
7000 Series
Delivery Systems
Simplified
Factory Options and Parts
General Information
Equipment Warranty
Radiance Operatory
Imagine + Operatory
Operatory Mobile
Sterilization Centers
Orthodontic Cabinetry
Reception/Front Desk Cabinetry
Color Options
Cabinet Warranty
Compressors
Dry Vacuums
Tanks
Wet Vacuums
Utility Room Accessories
Utility Warranty

IP-IMM-78, 75" High Island

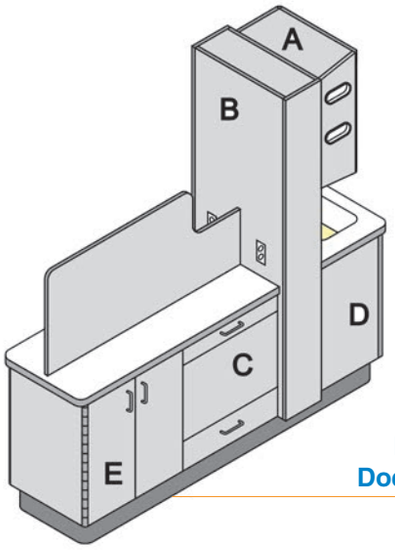

IP-IMM-78
Doctors Side

IMM-78 MIni Island Module, 75" High Island

Description	Part Number
Solid Surface Top, Soft Close Drawers and Doors	IP-IMM-78

Options

Description	Part Number
Glove or tissue dispenser	IP-GD-2
X-ray shielding	IP-IMM-78/XRS
Soap dispenser (each)	IP-SD
Tapmaster foot control	IP-TMC

Dimensions	In Inches
Length	77 3/4"
Depth	20 1/2"
Height	75"
Countertop	33 1/2"
Weight	108 lb.

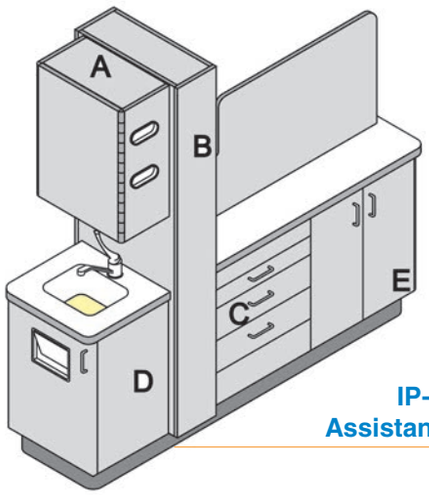

IP-IMM-78
Assistants Side

Features

A Upper storage cabinet with adjustable shelf and cup/towel dispenser

B X-ray column is reinforced with hardwood plywood and adaptable to any X-ray and/or light mount, and 20 AMP electric outlet

C Doctor side: (2) drawers- (1)3 5/8" and (1)6 1/4"
Assistant side: (3) drawers- (1)3 5/8" and (2)6 1/4"
Removable bottom for utility connections

D Waste compartment with front door drop and 21-quart waste container.
Solid Surface top with stainless under mount steel sink.
Separate base with leveling feet

E One storage cabinet with adjustable shelves on Doctor's side

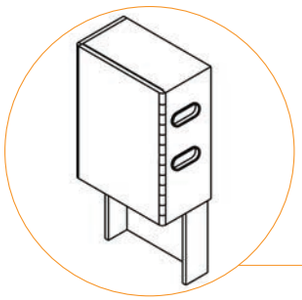

IP-GD-2

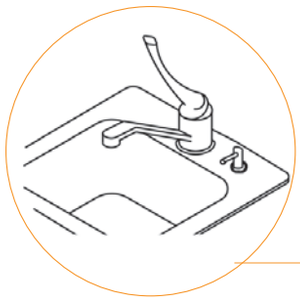

IP-SD

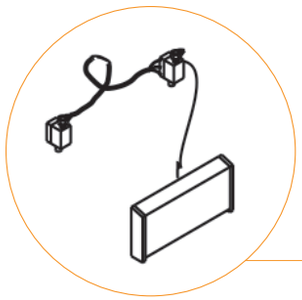

IP-TMC

Forest Packages
Chairs and Stools
Lights and Monitor Mounts
7000 Series
Delivery Systems
Simplified
Factory Options and Parts
General Information
Equipment Warranty
Radiance Operatory
Imagine + Operatory
Operatory Mobile
Sterilization Centers
Orthodontic Cabinetry
Reception/Front Desk Cabinetry
Color Options
Cabinet Warranty
Compressors
Dry Vacuums
Tanks
Wet Vacuums
Utility Room Accessories
Utility Warranty

IP-IMMR-80, 75" High Island

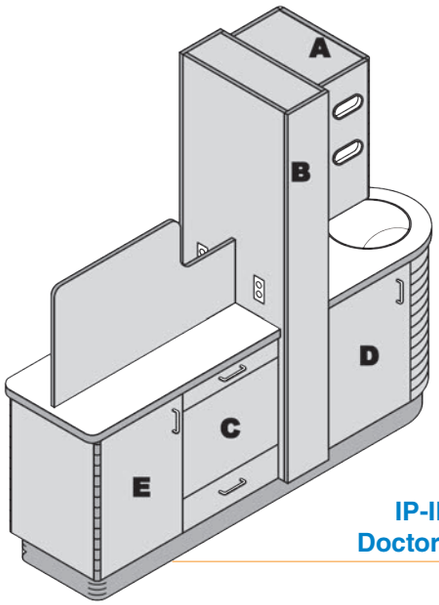

IP-IMM-78
Doctors Side

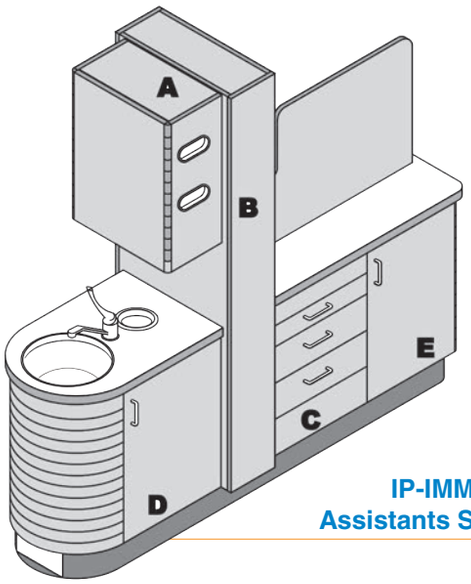

IP-IMM-78
Assistants Side

IP-IMMR-80 MIni Island Module, 75" High Island

Description	Part Number
Solid Surface Top, Soft Close Drawers and Doors	IP-IMMR-80

Options

Description	Part Number
Glove or tissue dispenser	IP-GD-2
X-Ray Shielding	IP-IMM-80/XRS
Soap dispenser (each)	IP-SD
Tapmaster foot control	IP-TMC

Dimensions	In Inches
Length	80"
Depth	22"
Height	75"
Countertop	33 1/2"
Weight	108 lb.

Features

A Upper storage cabinet with adjustable shelf and cup/towel dispenser

B X-ray column is reinforced with hardwood plywood and adaptable to any X-ray and/or light mount, and 20 AMP electric outlet

C Doctor side: (2) drawers- (1)3 5/8” and (1)6 1/4”
Assistant side: (3) drawers- (1)3 5/8” and (2)6 1/4”
Removable bottom for utility connections

D Round waste compartment with front door drop and 21-quart waste container.
Solid Surface top with stainless under mount steel sink.
Separate base with leveling feet

E One storage cabinet with adjustable shelves on Doctor’s side

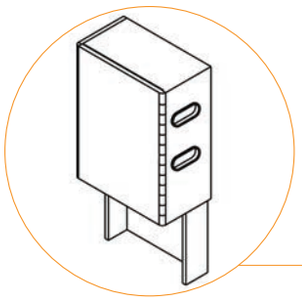

IP-GD-2

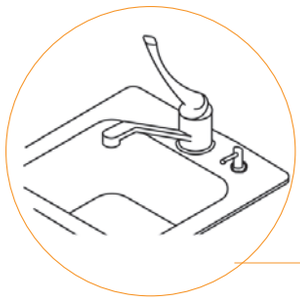

IP-SD

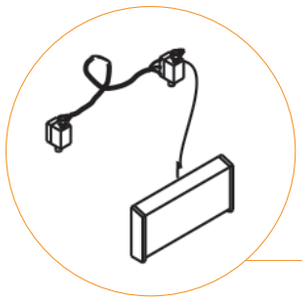

IP-TMC

Forest Packages
Chairs and Stools
Lights and Monitor Mounts
7000 Series
Delivery Systems
Simplified
Factory Options and Parts
General Information
Equipment Warranty
Radiance Operatory
Imagine + Operatory
Operatory Mobile
Sterilization Centers
Orthodontic Cabinetry
Reception/Front Desk Cabinetry
Color Options
Cabinet Warranty
Compressors
Dry Vacuums
Tanks
Wet Vacuums
Utility Room Accessories
Utility Warranty

Imagine +

Operatory Mobiles

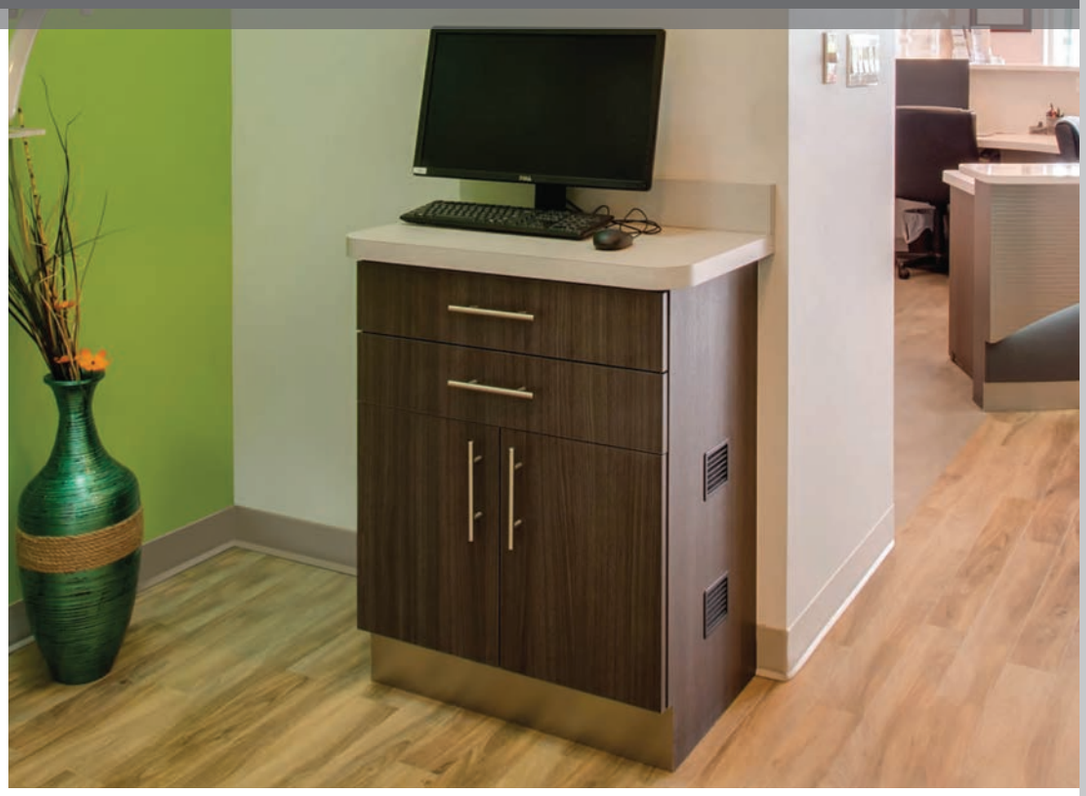

Forest Packages
Chairs and Stools
Lights and Monitor Mounts
7000 Series
Delivery Systems
Simplified
Factory Options and Parts
General Information
Equipment Warranty
Radiance Operatory
Imagine + Operatory
Operatory Mobile
Sterilization Centers
Orthodontic Cabinetry
Reception/Front Desk Cabinetry
Color Options
Cabinet Warranty
Compressors
Dry Vacuums
Tanks
Wet Vacuums
Utility Room Accessories
Utility Warranty

IP-AM4-31 and IP-AM4-34

IP-AM4-31
Five Drawer Cabinet

Operatory Mobile Cabinets

Description	Part Number
Doctor's Mobile Cabinet (5 drawers)	IP-AM4-31

Select Options

Description	Part Number
Electric power strip	IP-EPS
Storage well organizer	IP-SWO

Dimensions	In Inches
Height	30 5/8"
Width	21 1/4"
Depth	19 3/4"

Features

Metabox drawer system
3 drawers - 3 5/8”
1 drawer - 5”
1 drawer - 8"
Available in most colors

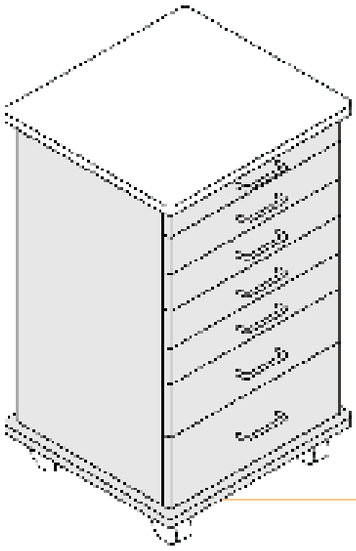

IP-AM4-34
Six Drawer Cabinet

Operatory Mobile Cabinets

Description	Part Number
Doctor's Mobile Cabinet (6 drawers)	IP-AM4-34

Select Options

Description	Part Number
Electric power strip	IP-EPS
Storage well organizer	IP-SWO

Dimensions	In Inches
Height	33 5/8"
Width	21 1/4"
Depth	19 3/4"

Features

Metabox drawer system
4 drawers - 3 5/8”
1 drawer - 5”
1 drawer - 7 1/4"
Available in most colors

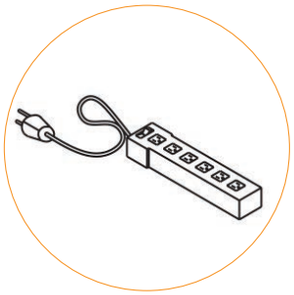

IP-EPS

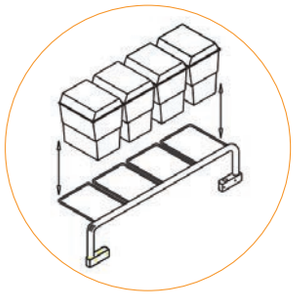

IP-SWO

Forest Packages
Chairs and Stools
Lights and Monitor Mounts
7000 Series
Delivery Systems
Simplified
Factory Options and Parts
General Information
Equipment Warranty
Radiance Operatory
Imagine + Operatory
Operatory Mobile
Sterilization Centers
Orthodontic Cabinetry
Reception/Front Desk Cabinetry
Color Options
Cabinet Warranty
Compressors
Dry Vacuums
Tanks
Wet Vacuums
Utility Room Accessories
Utility Warranty

IP-AM8-31 and IP-AM8-34

IP-AM8-31
Four Drawer Cabinet

Operatory Mobile Cabinets

Description	Part Number
North Carolina Assistants Mobile (4 drawers)	IP-AM8-31

Select Options

Description	Part Number
Electric power strip	IP-EPS
Storage well organizer	IP-SWO

Dimensions	In Inches
Height	31 1/4"
Width	21 1/4"
Depth	20 1/2"

Features

- Metabox drawer system
- 1 flip down drawer
- 2 drawers - 3 5/8”
- 1 drawer - 6 3/4"
- Pullout work surface on left side
- Available in most colors

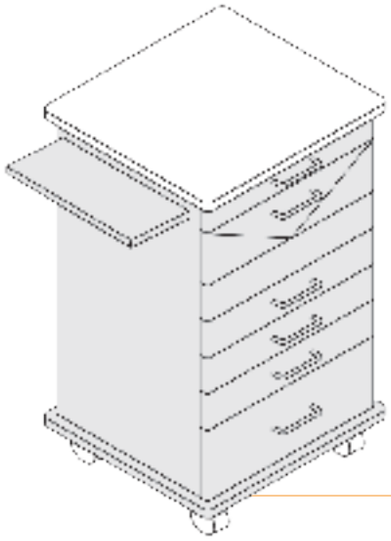

IP-AM8-34
Five Drawer Cabinet

Operatory Mobile Cabinets

Description	Part Number
North Carolina Assistants Mobile (5 drawers)	IP-AM8-34

Select Options

Description	Part Number
Electric power strip	IP-EPS
Storage well organizer	IP-SWO

Dimensions	In Inches
Height	33 5/8"
Width	21 1/4" (34" Extend)
Depth	19 3/4"

Features

- Metabox drawer system
- 1 flip down drawer
- 3 drawers - 3 5/8”
- 1 drawer - 6"
- Pullout work surface on left side
- Available in most colors

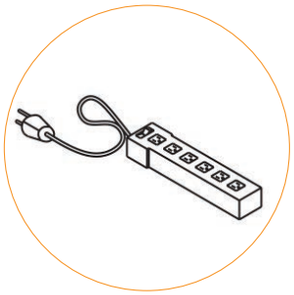

IP-EPS

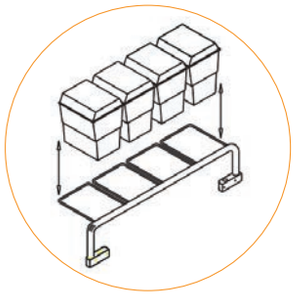

IP-SWO

Forest Packages
Chairs and Stools
Lights and Monitor Mounts
7000 Series
Delivery Systems
Simplified
Factory Options and Parts
General Information
Equipment Warranty
Radiance Operatory
Imagine + Operatory
Operatory Mobile
Sterilization Centers
Orthodontic Cabinetry
Reception/Front Desk Cabinetry
Color Options
Cabinet Warranty
Compressors
Dry Vacuums
Tanks
Wet Vacuums
Utility Room Accessories
Utility Warranty

IP-AM6

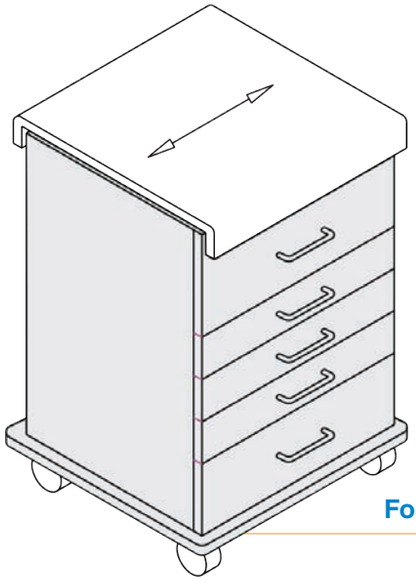

IP-AM6
Four Drawer Cabinet

Operatory Mobile Cabinets

Description	Part Number
Oregon/Alabama Assistant's Mobile (4 drawers)	IP-AM6

Select Options

Description	Part Number
Electric power strip	IP-EPS
Front to back sliding top	IP-FTB
Storage well organizer	IP-SWO

Dimensions	In Inches
Height	31 1/8"
Width	21 1/4" (32 11/16" Extend) (44 1/8" Slide range)
Depth	20 1/2"

Features

- Equipment well 8 1/2" deep
- Metabox drawer system
- 3 drawers - 3 5/8"
- 1 drawer - 6 3/4"
- Post formed sliding top
- Available in most colors

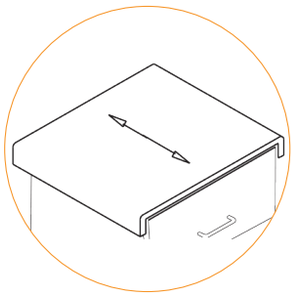

IP-FTB

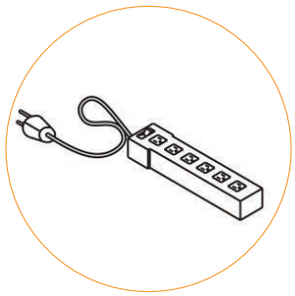

IP-EPS

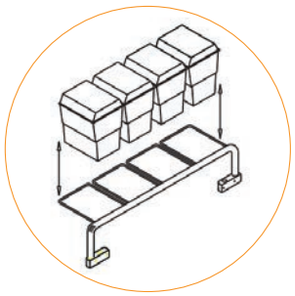

IP-SWO

Forest Packages
Chairs and Stools
Lights and Monitor Mounts
7000 Series
Delivery Systems
Simplified
Factory Options and Parts
General Information
Equipment Warranty
Radiance Operatory
Imagine + Operatory
Operatory Mobile
Sterilization Centers
Orthodontic Cabinetry
Reception/Front Desk Cabinetry
Color Options
Cabinet Warranty
Compressors
Dry Vacuums
Tanks
Wet Vacuums
Utility Room Accessories
Utility Warranty

IP-EM4-31 and IP-EM8-31

IP-EM4-31
Five Drawer Cabinet

Operatory Mobile Cabinets

Description	Part Number
Doctor's Mobile (5 drawers)	IP-EM4-31

Select Options

Description	Part Number
Electric power strip	IP-EPS
Storage well organizer	IP-SWO

Select Color Options

Countertop/Cabinet Available only in: White, Grey, Almond, or Surf

White pulls

No variations to the economy units are available.

Dimensions	In Inches
Height	30 5/8"
Width	21 1/4"
Depth	20 1/2"

Features

Metabox drawer system

3 drawers - 3 5/8"

2 drawers - 5 1/2"

1 drawer - 7 1/2"

IP-EM8-31
Four Drawer Cabinet

Operatory Mobile Cabinets

Description	Part Number
North Carolina Assistant's Mobile (4 drawers)	IP-EM8-31

Select Options

Description	Part Number
Electric power strip	IP-EPS
Storage well organizer	IP-SWO

Select Color Options

Countertop/Cabinet Available only in: White, Grey, Almond, or Surf

White pulls

No variations to the economy units are available.

Dimensions	In Inches
Height	30 5/8"
Width	21 1/4" (34" extended)
Depth	20 1/2"

Features

Metabox drawer system

1 drawer - 9" flip down

2 drawers - 3 5/8"

1 drawer - 6 3/4"

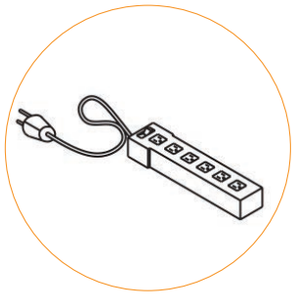

IP-EPS

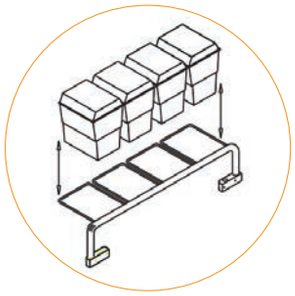

IP-SWO

Forest Packages
Chairs and Stools
Lights and Monitor Mounts
7000 Series
Delivery Systems
Simplified
Factory Options and Parts
General Information
Equipment Warranty
Radiance Operatory
Imagine + Operatory
Operatory Mobile
Sterilization Centers
Orthodontic Cabinetry
Reception/Front Desk Cabinetry
Color Options
Cabinet Warranty
Compressors
Dry Vacuums
Tanks
Wet Vacuums
Utility Room Accessories
Utility Warranty

IP-EM6

IP-EM6
Assistant's Cabinet

Operatory Mobile Cabinets

Description	Part Number
Alabama Assistant's Mobile (? drawers)	IP-EM6

Select Options

Description	Part Number
Electric power strip	IP-EPS
Front to back sliding top	IP-FTB
Storage well organizer	IP-SWO

Select Color Options

Countertop/Cabinet Available only in: White, Grey, Almond, or Surf

White pulls

No variations to the economy units are available.

Dimensions	In Inches
Height	30 5/8"
Width	21 1/4" (32 1/2" Extend) (48 1/4" Slide range)
Depth	20 1/2"

Features

Equipment well 8 1/2" deep

Metabox drawer system

Sliding top

3 drawers - 3 5/8"

1 drawer - 5 1/2"

1 drawer - 8 /1/8"

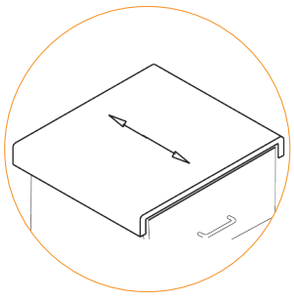

IP-FTB

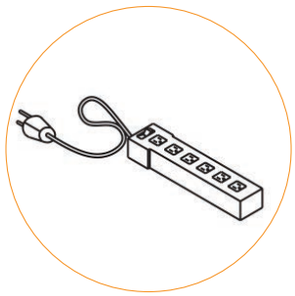

IP-EPS

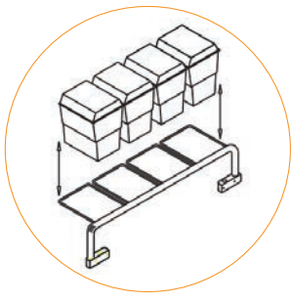

IP-SWO

Forest Packages
Chairs and Stools
Lights and Monitor Mounts
7000 Series
Delivery Systems
Simplified
Factory Options and Parts
General Information
Equipment Warranty
Radiance Operatory
Imagine + Operatory
Operatory Mobile
Sterilization Centers
Orthodontic Cabinetry
Reception/Front Desk Cabinetry
Color Options
Cabinet Warranty
Compressors
Dry Vacuums
Tanks
Wet Vacuums
Utility Room Accessories
Utility Warranty

Imagine +

Sterilization Centers

Forest Packages
Chairs and Stools
Lights and Monitor Mounts
7000 Series
Delivery Systems
Simplified
Factory Options and Parts
General Information
Equipment Warranty
Radiance Operatory
Imagine + Operatory
Operatory Mobile
Sterilization Centers
Orthodontic Cabinetry
Reception/Front Desk Cabinetry
Color Options
Cabinet Warranty
Compressors
Dry Vacuums
Tanks
Wet Vacuums
Utility Room Accessories
Utility Warranty

Sterilization Centers

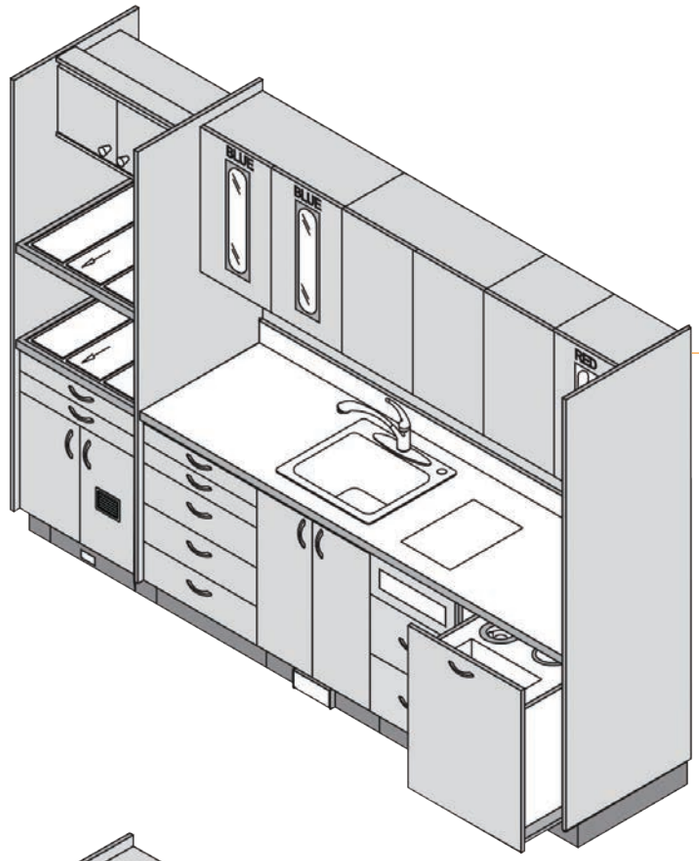

Options Shown

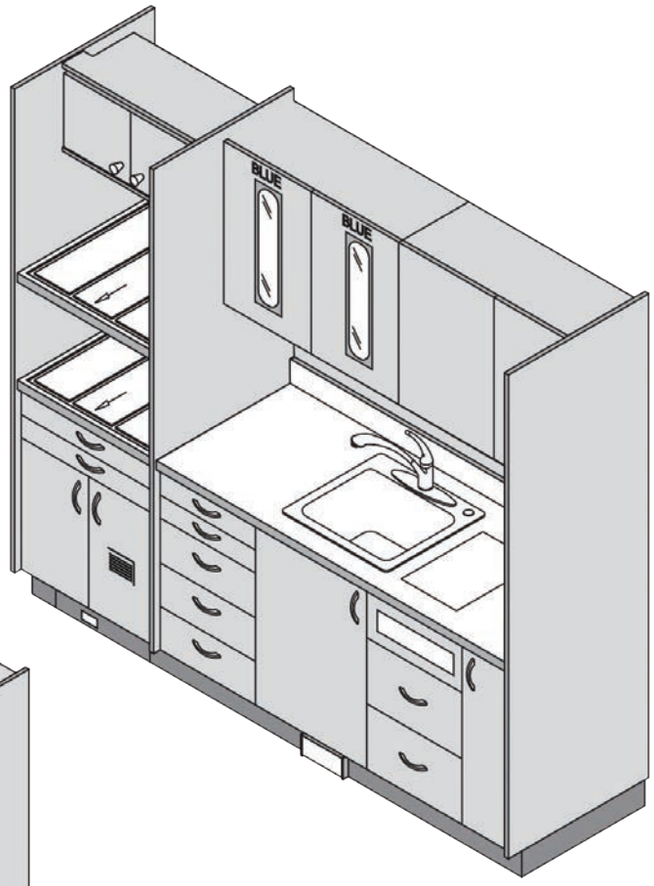

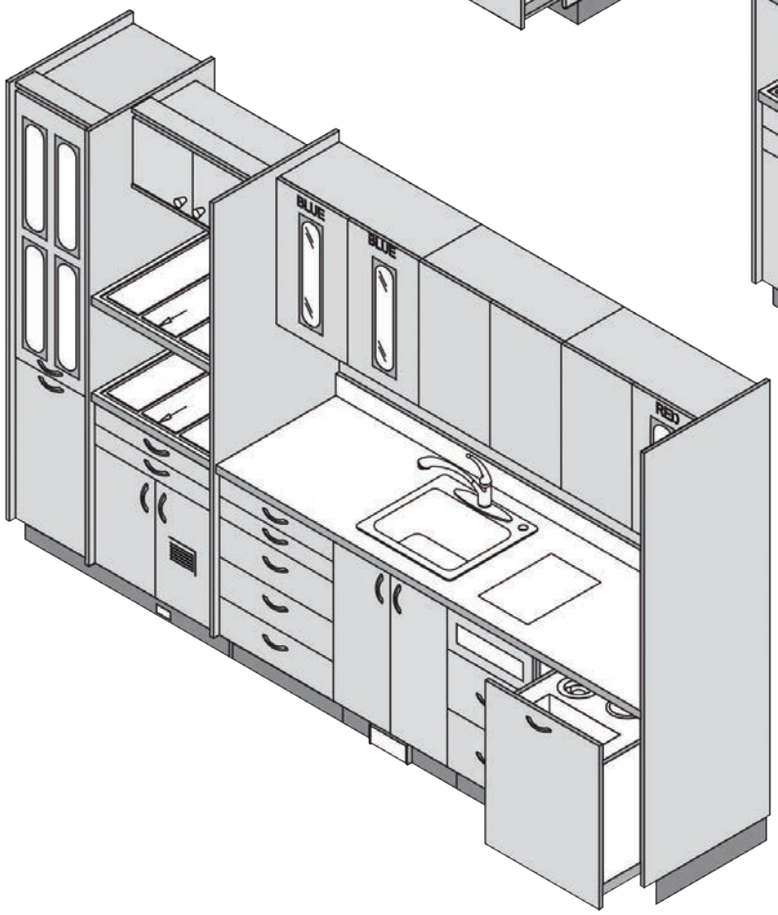

Forest Packages
Chairs and Stools
Lights and Monitor Mounts
7000 Series
Delivery Systems
Simplified
Factory Options and Parts
General Information
Equipment Warranty
Radiance Operatory
Imagine + Operatory
Operatory Mobile
Sterilization Centers
Orthodontic Cabinetry
Reception/Front Desk Cabinetry
Color Options
Cabinet Warranty
Compressors
Dry Vacuums
Tanks
Wet Vacuums
Utility Room Accessories
Utility Warranty

IP-TSC-8 Sterilization Center

Sterilization Center

Description	Part Number
1"Solid Surface Top, Soft Close Drawers and Doors, Tapmaster Foot Control	IP-TSC-8

Features

- 20” x 19” Stainless steel under mount sink
- Delta Euro Faucet with pullout spray
- Tapmaster foot control
- Wrapping drawers (2)
- Soft Close doors and drawers
- Towel/Glove dispenser
- Pullout shelves
- Task lighting and valance
- Upper cabinets with blue light, tray storage

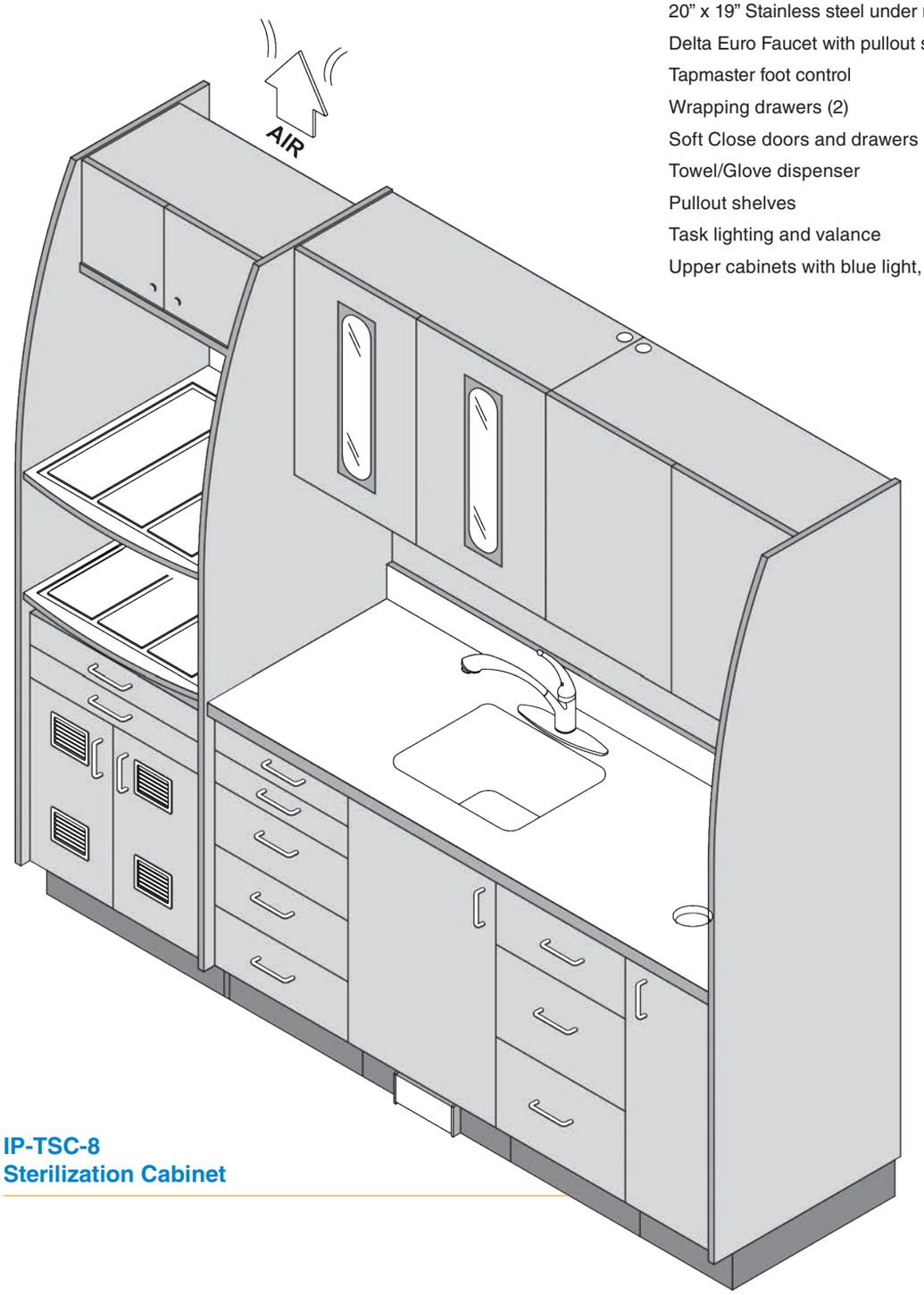

IP-TSC-8
Sterilization Cabinet

Dimensions	In Inches
Length	94 1/4"
Depth	26 1/2"
Height	87"

Forest Packages
Chairs and Stools
Lights and Monitor Mounts
7000 Series
Delivery Systems
Simplified
Factory Options and Parts
General Information
Equipment Warranty
Radiance Operatory
Imagine + Operatory
Operatory Mobile
Sterilization Centers
Orthodontic Cabinetry
Reception/Front Desk Cabinetry
Color Options
Cabinet Warranty
Compressors
Dry Vacuums
Tanks
Wet Vacuums
Utility Room Accessories
Utility Warranty

IP-TSC-8 Sterilization Center

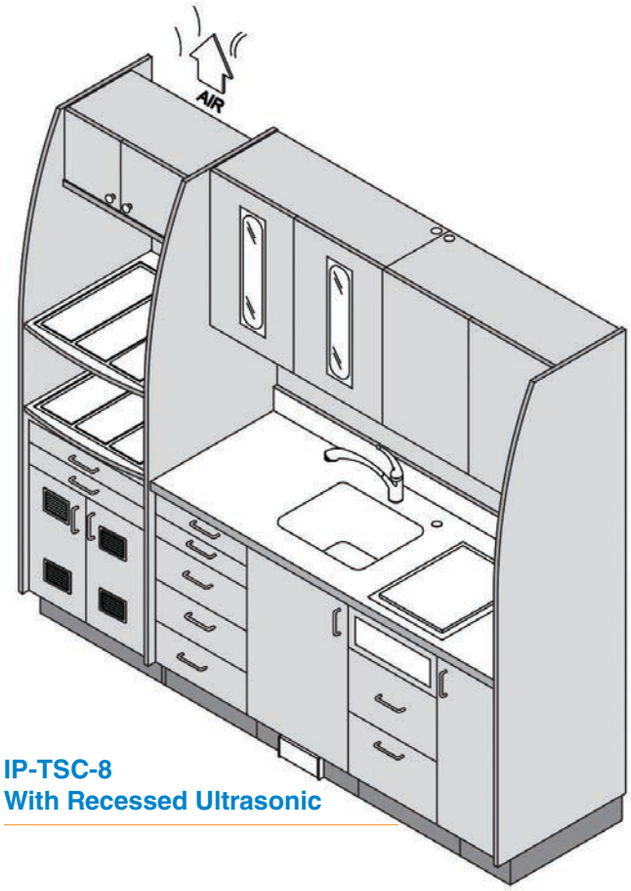

IP-TSC-8
With Recessed Ultrasonic

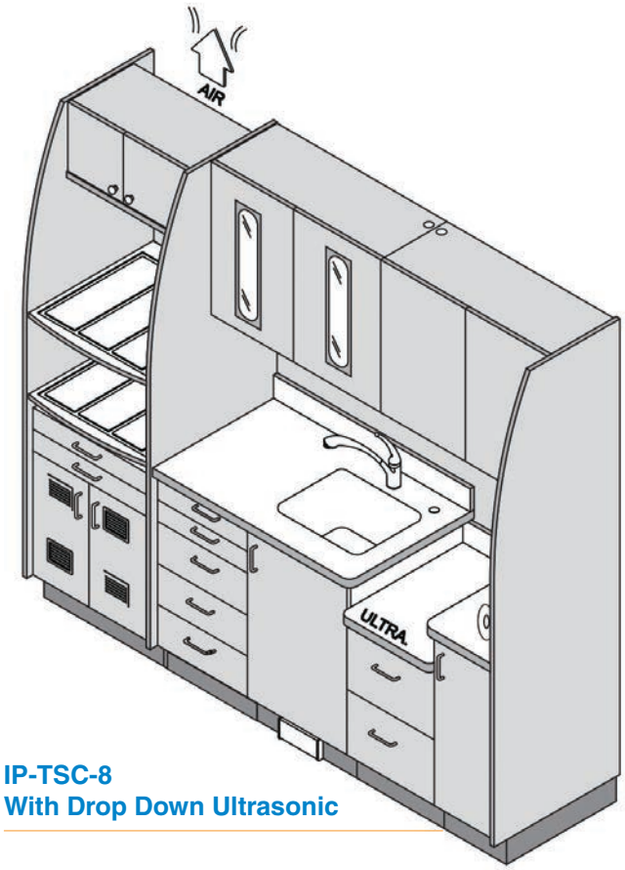

IP-TSC-8
With Drop Down Ultrasonic

Sterilization Center

Description	Part Number
8' Center With Recessed Ultrasonic	IP-TSC-8
8' Center With Drop Down Ultrasonic	IP-TSC-8

Select Options

Description	Part Number
Bag storage 18”	IP-BAGSTOR
Double Autoclave stack cabinet	IP-DBLAC
Recessed Ultrasonic cut-out	IP-RUL
Soap dispenser	IP-SD-C
Vacuum with grommet	IP-VAC

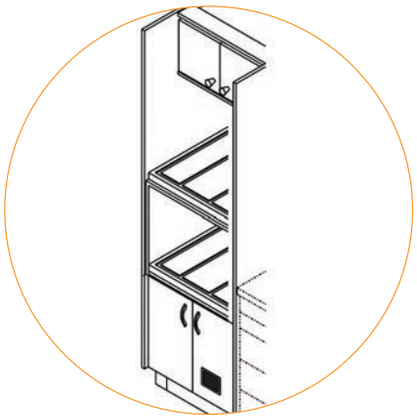

IP-DBLAC

IP-SD-C

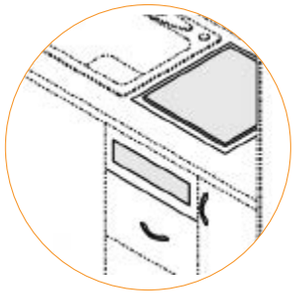

IP-RUL

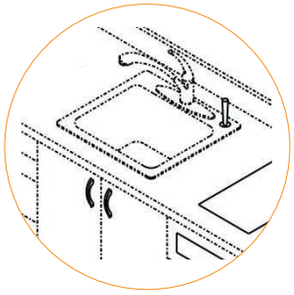

IP-VAC

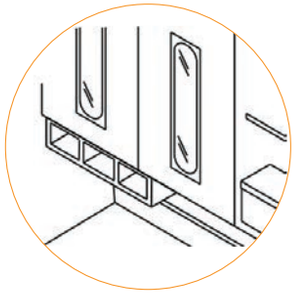

IP-BAGSTOR

Forest Packages
Chairs and Stools
Lights and Monitor Mounts
7000 Series
Delivery Systems
Simplified
Factory Options and Parts
General Information
Equipment Warranty
Radiance Operatory
Imagine + Operatory
Operatory Mobile
Sterilization Centers
Orthodontic Cabinetry
Reception/Front Desk Cabinetry
Color Options
Cabinet Warranty
Compressors
Dry Vacuums
Tanks
Wet Vacuums
Utility Room Accessories
Utility Warranty

IP-TSC-9 Sterilization Center

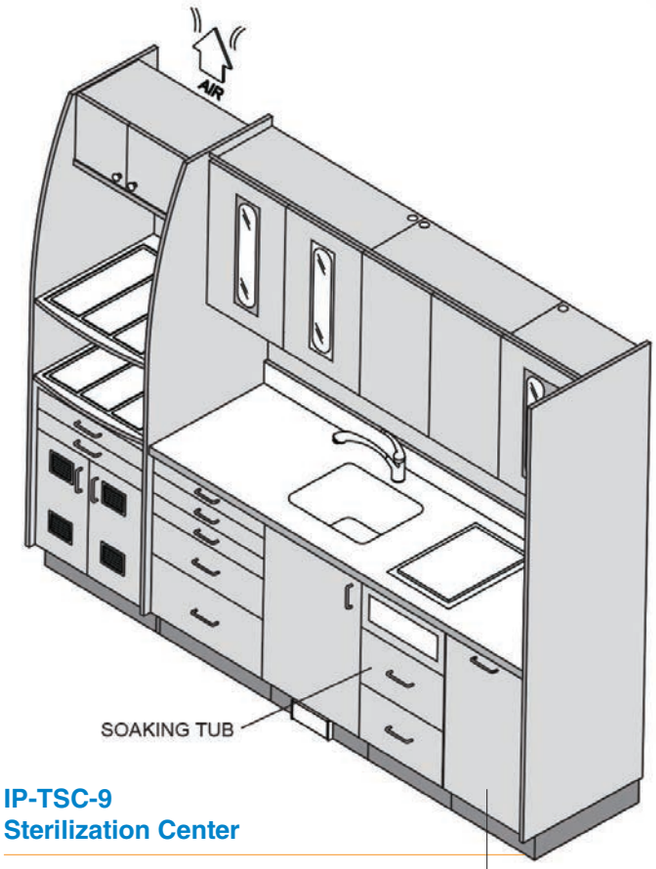

IP-TSC-9 Sterilization Center

Sterilization Center

Description	Part Number
Solid Surface Top, Soft Close Drawers and Doors, Tapmaster Foot Control	IP-TSC-9

Select Options

Description	Part Number
Bag storage 18”	IP-BAGSTOR
Double Autoclave stack cabinet	IP-DBLAC
Recessed Ultrasonic cut-out	IP-RUL
Soap dispenser	IP-SD-C
Vacuum with grommet	IP-VAC

Features

- 20” x 19” Stainless steel under mount sink
- Delta Euro Faucet with pullout spray
- Tapmaster foot control
- Wrapping drawers (2)
- Soft Close doors and drawers
- Towel/Glove dispenser
- Pullout shelves
- Task lighting and valance
- Upper cabinets with blue light, tray storage
- Glass door inserts
- Heat shield

Dimensions	In Inches
Length	107 1/4"
Depth	26 1/2"
Height	84"

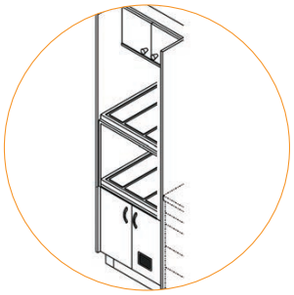

IP-DBLAC

IP-SD-C

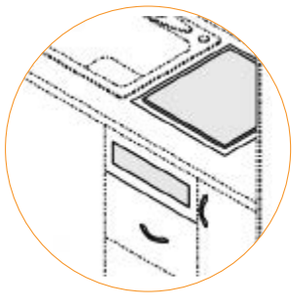

IP-RUL

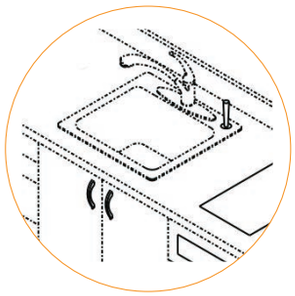

IP-VAC

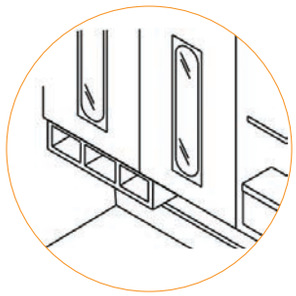

IP-BAGSTOR

Forest Packages
Chairs and Stools
Lights and Monitor Mounts
7000 Series
Delivery Systems
Simplified
Factory Options and Parts
General Information
Equipment Warranty
Radiance Operatory
Imagine + Operatory
Operatory Mobile
Sterilization Centers
Orthodontic Cabinetry
Reception/Front Desk Cabinetry
Color Options
Cabinet Warranty
Compressors
Dry Vacuums
Tanks
Wet Vacuums
Utility Room Accessories
Utility Warranty

IP-TSC-10 Sterilization Center

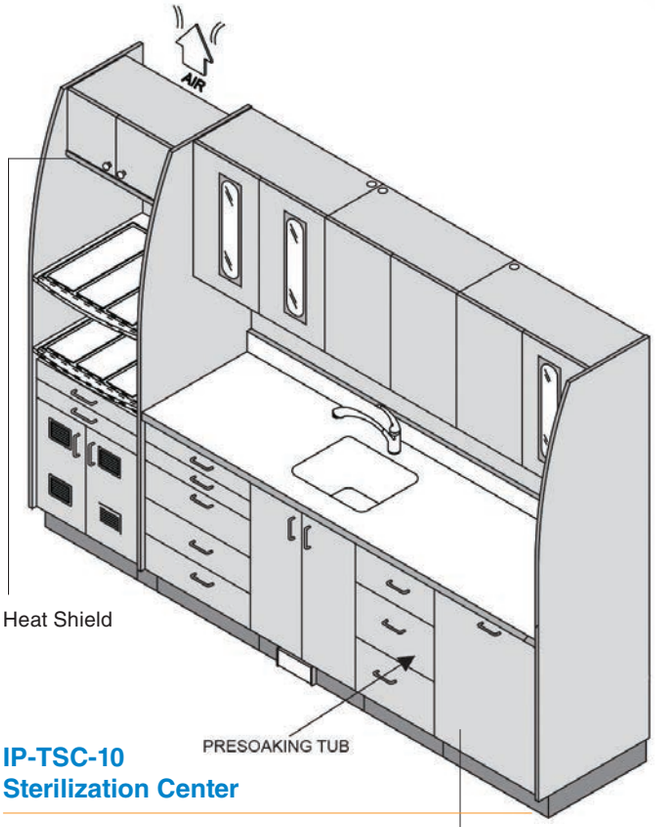

IP-TSC-10 Sterilization Center

Sterilization Center

Description	Part Number
Solid Surface Top, Soft Close Drawers and Doors, Tapmaster Foot Control	IP-TSC-10

Select Options

Description	Part Number
Bag storage 18”	IP-BAGSTOR
Double Autoclave stack cabinet	IP-DBLAC
Drop down Ultrasonic	IP-DDUL
Recessed Ultrasonic cut-out	IP-RUL
Soap dispenser	IP-SD-C
Vacuum with grommet	IP-VAC

Features

- Soild surface counter top
- 20” x 19” Stainless steel under mount sink
- Delta Euro Faucet with pullout spray
- Tapmaster foot control
- Wrapping drawers (2)
- Soft Close doors and drawers
- Towel/Glove dispenser
- StarBoard pullout shelves
- Task lighting and valance
- Upper cabinets with blue light, tray storage
- Glass door inserts
- Soaping tub

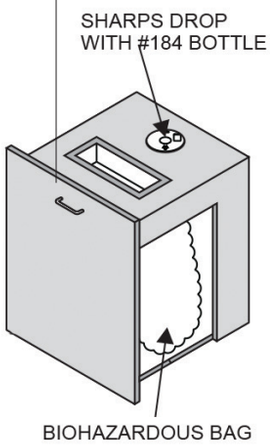

Dimensions	In Inches
Length	116 1/4"
Depth	25 1/2"
Height	84"

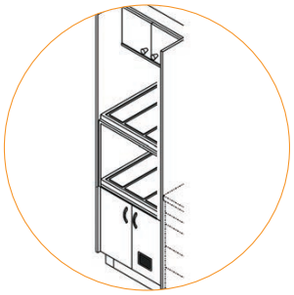

IP-DBLAC

IP-SD-C

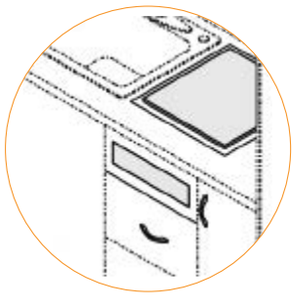

IP-RUL

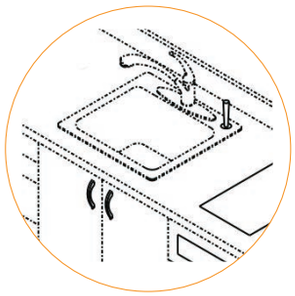

IP-VAC

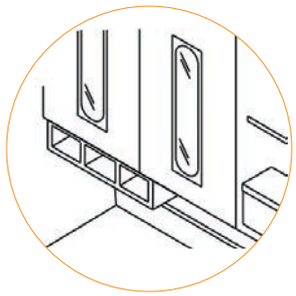

IP-BAGSTOR

Forest Packages
Chairs and Stools
Lights and Monitor Mounts
7000 Series
Delivery Systems
Simplified
Factory Options and Parts
General Information
Equipment Warranty
Radiance Operatory
Imagine + Operatory
Operatory Mobile
Sterilization Centers
Orthodontic Cabinetry
Reception/Front Desk Cabinetry
Color Options
Cabinet Warranty
Compressors
Dry Vacuums
Tanks
Wet Vacuums
Utility Room Accessories
Utility Warranty

IP-TSC-12 Sterilization Center

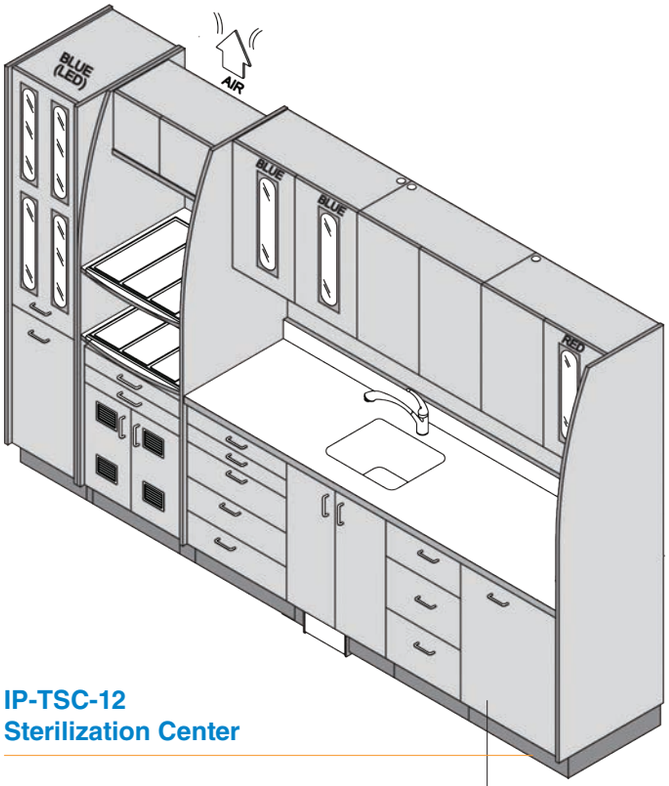

IP-TSC-12 Sterilization Center

Sterilization Center

Description	Part Number
Solid Surface Top, Soft Close Drawers and Doors, Tapmaster Foot Control	IP-TSC-12

Select Options

Description	Part Number
Bag storage 18”	IP-BAGSTOR
Double Autoclave stack cabinet	IP-DBLAC
Drop down Ultrasonic	IP-DDUL
Recessed Ultrasonic cut-out	IP-RUL
Soap dispenser	IP-SD-C
Vacuum with grommet	IP-VAC

Features

- Soild surface counter top
- 20” x 19” Stainless steel under mount sink
- Delta Euro Faucet with pullout spray
- Tapmaster foot control
- Wrapping drawers (2)
- Soft Close doors and drawers
- Towel/Glove dispenser
- StarBoard pullout shelves
- Task lighting and valance
- Glass door inserts
- Pre-soaking tub
- Clean storage upper cabinets with blue light, tray storage

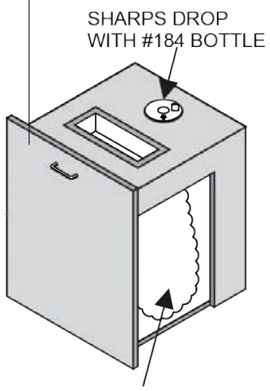

Dimensions	In Inches
Length	142"
Depth	26 1/2"
Height	84"

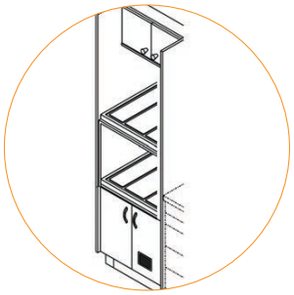

IP-DBLAC

IP-SD-C

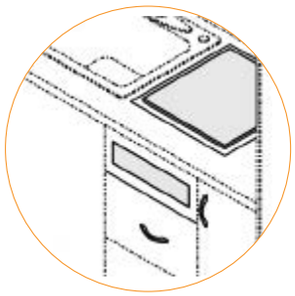

IP-RUL

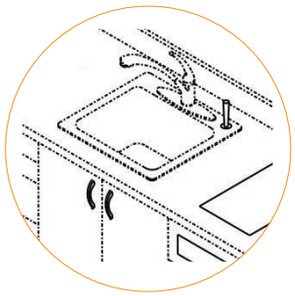

IP-VAC

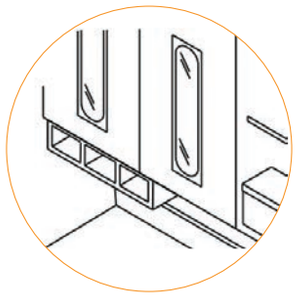

IP-BAGSTOR

Forest Packages
Chairs and Stools
Lights and Monitor Mounts
7000 Series
Delivery Systems
Simplified
Factory Options and Parts
General Information
Equipment Warranty
Radiance Operatory
Imagine + Operatory
Operatory Mobile
Sterilization Centers
Orthodontic Cabinetry
Reception/Front Desk Cabinetry
Color Options
Cabinet Warranty
Compressors
Dry Vacuums
Tanks
Wet Vacuums
Utility Room Accessories
Utility Warranty

Imagine +

Orthodontic Cabinetry

Forest Packages
Chairs and Stools
Lights and Monitor Mounts
7000 Series
Delivery Systems
Simplified
Factory Options and Parts
General Information
Equipment Warranty
Radiance Operatory
Imagine + Operatory
Operatory Mobile
Sterilization Centers
Orthodontic Cabinetry
Reception/Front Desk Cabinetry
Color Options
Cabinet Warranty
Compressors
Dry Vacuums
Tanks
Wet Vacuums
Utility Room Accessories
Utility Warranty

IP-ORISR-01

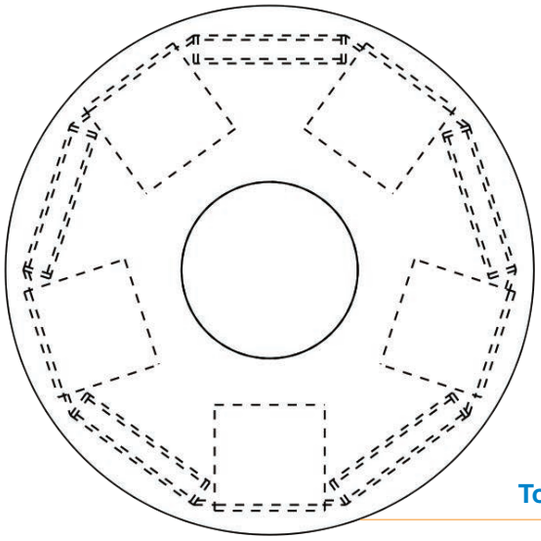

Top View

Orthodontic 5 Bay Island

Description	Part Number
5 Bay Ortho Island	IP-ORISR-01

Select Options

Description	Part Number
2 Hand piece automatic unit	2520
Flip down drawer	IP-FDD
Fiber Optics for one handpiece	1700-021-CS
Suction added to delivery head	1408-CS
Water bottle	IP-WBOT

Select Color Options

Laminate countertop only	Included

Select Colors

Countertop: _____

Cabinets: _____

PVC: _____

Pulls: _____

Cabinet TOTAL: $ _____

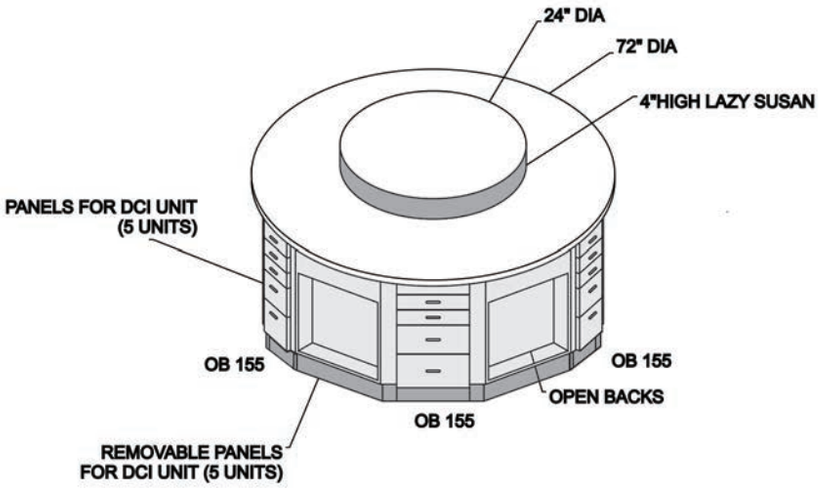

Dimensions	In Inches
Diameter	72"
Lazy Susan	24"
Height	33 1/2"

Features

- (5) Five drawer cabinets
- 24” Lazy Susan
- Provisions for five dental units
- Metabox drawer system
- Separate base with leveling feet
- Easy access removable panels for dental unit utilities hook-up
- Available with 2 or 3 handpiece panel mounted units
- **Customizing Available**

IP-FDD

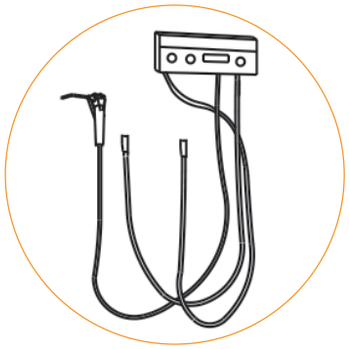

IP-2HPA

Forest Packages
Chairs and Stools
Lights and Monitor Mounts
7000 Series
Delivery Systems
Simplified
Factory Options and Parts
General Information
Equipment Warranty
Radiance Operatory
Imagine + Operatory
Operatory Mobile
Sterilization Centers
Orthodontic Cabinetry
Reception/Front Desk Cabinetry
Color Options
Cabinet Warranty
Compressors
Dry Vacuums
Tanks
Wet Vacuums
Utility Room Accessories
Utility Warranty

IP-ORISRH-01

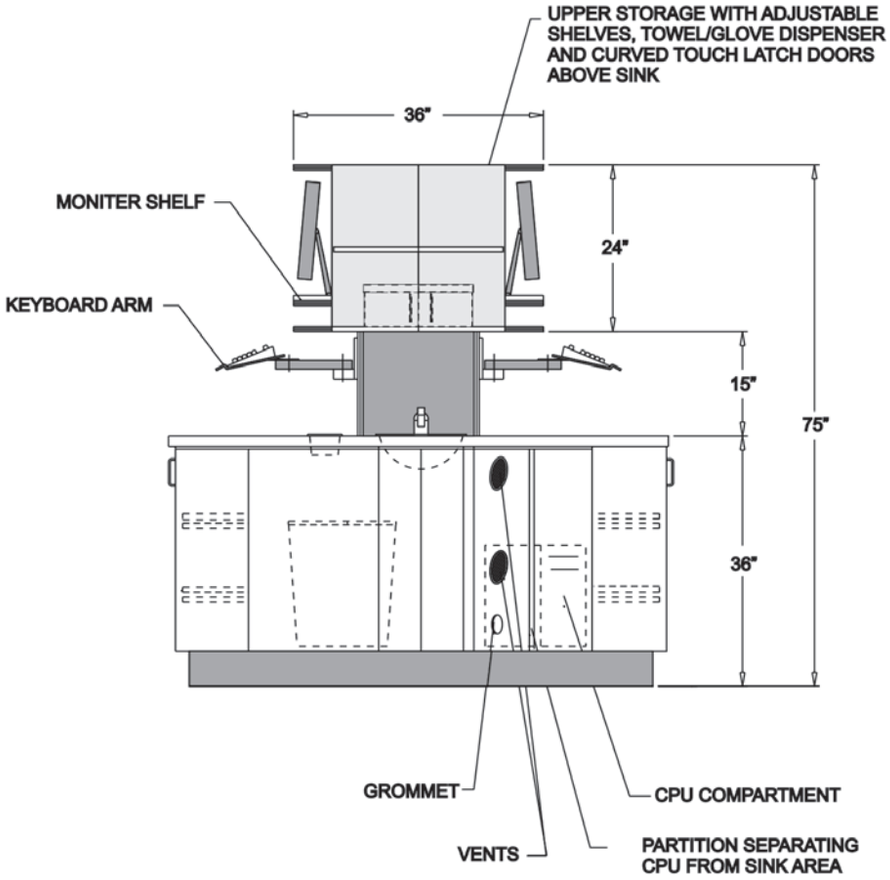

ELEVATION " A""

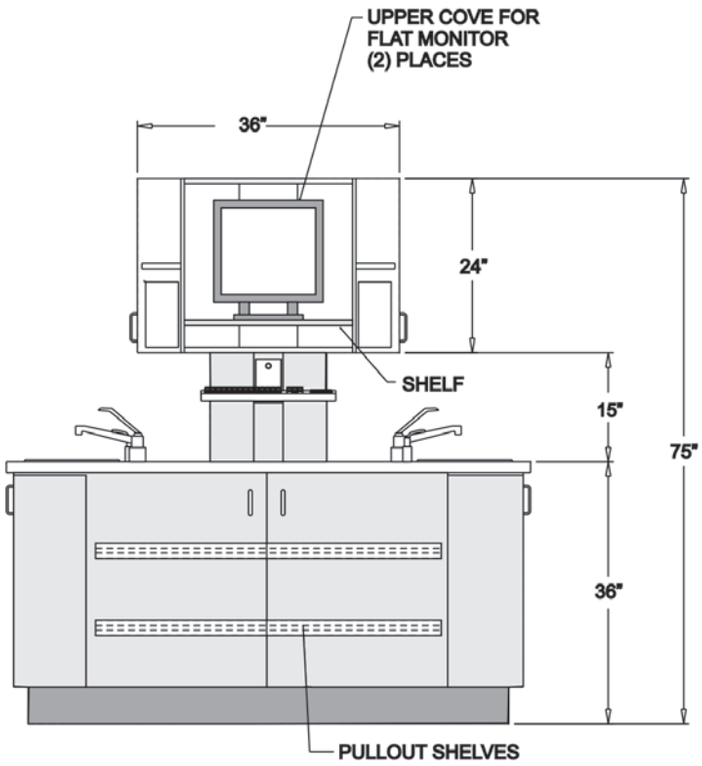

ELEVATION "B"

Forest Packages
Chairs and Stools
Lights and Monitor Mounts
7000 Series
Delivery Systems
Simplified
Factory Options and Parts
General Information
Equipment Warranty
Radiance Operatory
Imagine + Operatory
Operatory Mobile
Sterilization Centers
Orthodontic Cabinetry
Reception/Front Desk Cabinetry
Color Options
Cabinet Warranty
Compressors
Dry Vacuums
Tanks
Wet Vacuums
Utility Room Accessories
Utility Warranty

IP-ORISRH-01

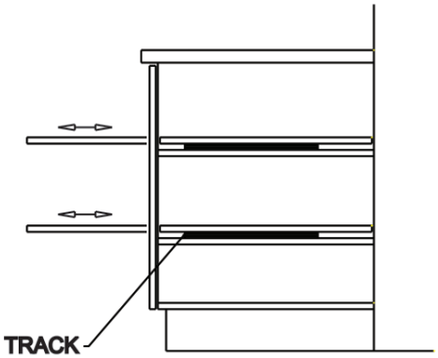

SECTION THRU PULLOUT DRAWER

Orthodontic Round Island

Description	Part Number
Ortho Round Island	IP-ORISRH-01

Select Options

Description	Part Number
Tapmaster foot control	IP-TMC

Select Countertop Options

Laminate countertop	Included

Select Colors

Countertop: _____

Cabinets: _____

PVC: _____

Pulls: _____

Cabinet TOTAL: $ _____

Dimensions	In Inches
Diameter	72"
Overall Height	105"
Counter Height	36"

Features

Upper tower includes:

Provisions for two flat screen monitors

Upper storage cabinet with towel glove dispenser

Center column providing easy access for wiring

Wall mounted keyboard arms

Base cabinet includes:

Rounded face sink cabinets

13” Round stainless steel sinks with single lever faucet.

Separate base with leveling feet

Rounded face storage cabinet with pullout shelves

Vented CPU compartments

Waste drop in countertop and 36qt container below

Customizing Available

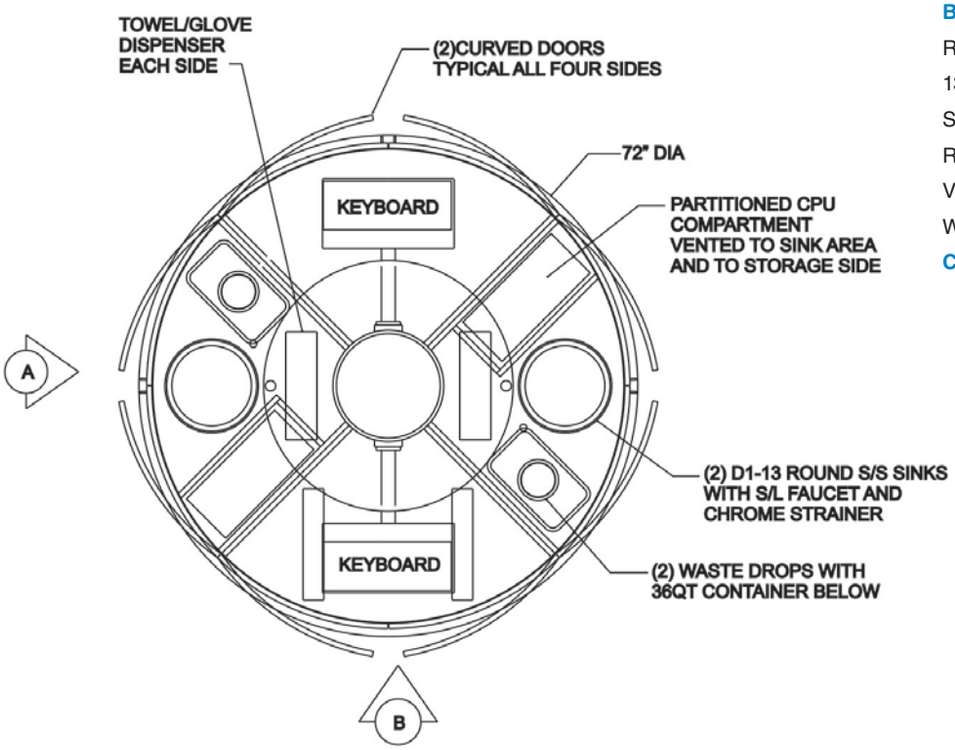

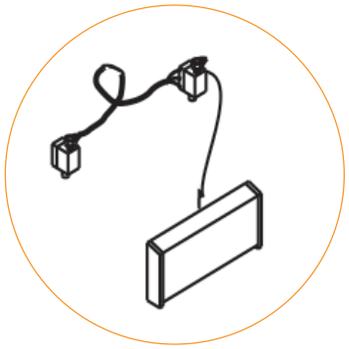

IP-TMC

Forest Packages
Chairs and Stools
Lights and Monitor Mounts
7000 Series
Delivery Systems
Simplified
Factory Options and Parts
General Information
Equipment Warranty
Radiance Operatory
Imagine + Operatory
Operatory Mobile
Sterilization Centers
Orthodontic Cabinetry
Reception/Front Desk Cabinetry
Color Options
Cabinet Warranty
Compressors
Dry Vacuums
Tanks
Wet Vacuums
Utility Room Accessories
Utility Warranty

IP-ORIS-01

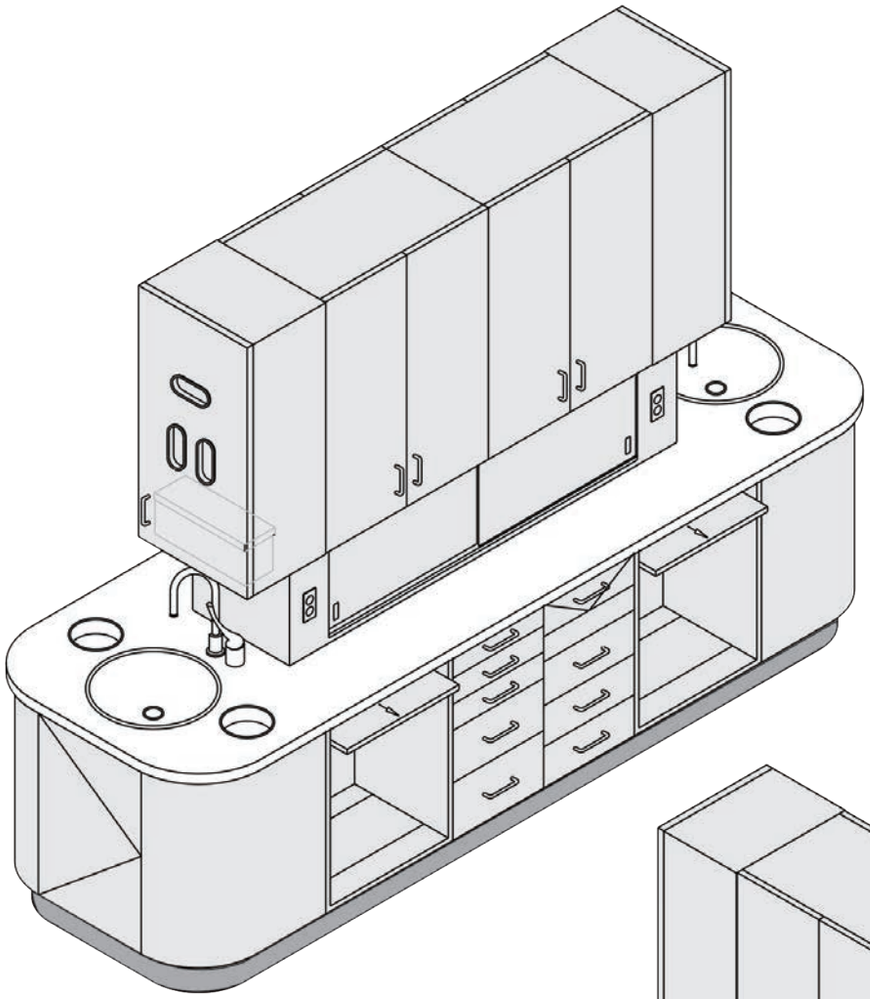

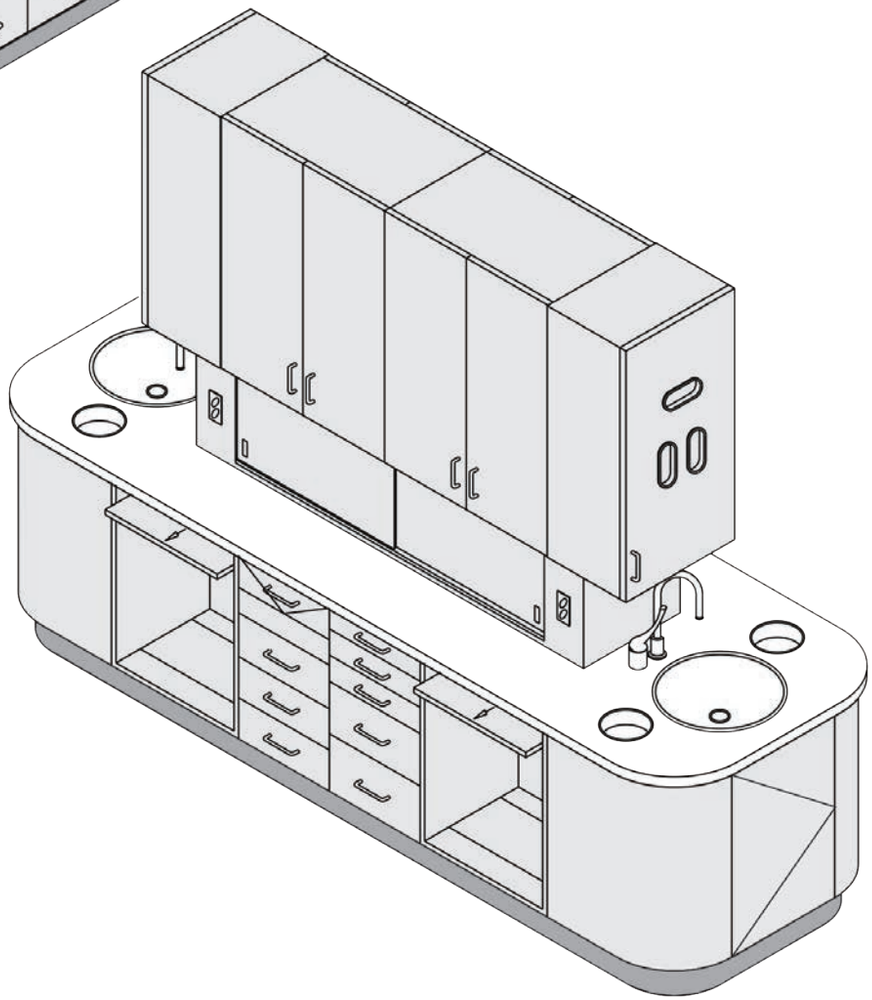

Forest Packages
Chairs and Stools
Lights and Monitor Mounts
7000 Series
Delivery Systems
Simplified
Factory Options and Parts
General Information
Equipment Warranty
Radiance Operatory
Imagine + Operatory
Operatory Mobile
Sterilization Centers
Orthodontic Cabinetry
Reception/Front Desk Cabinetry
Color Options
Cabinet Warranty
Compressors
Dry Vacuums
Tanks
Wet Vacuums
Utility Room Accessories
Utility Warranty

IP-ORIS-01

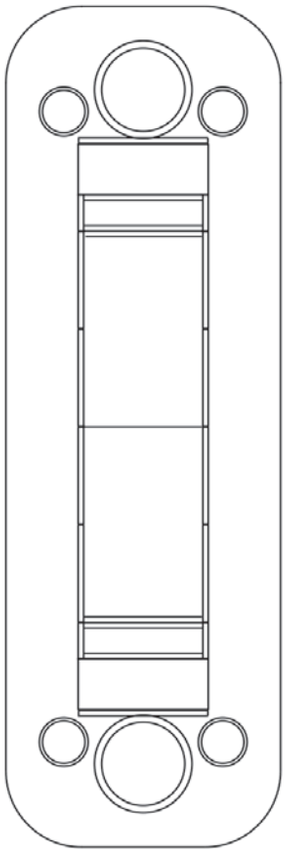

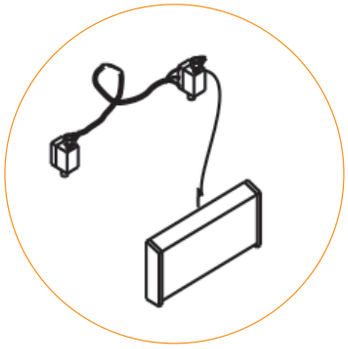

IP-TMC

Orthodontic 4 Bay Island

Description	Part Number
4 Bay Ortho Island	IP-ORIS-01

Select Options

Description	Part Number
Delivery System, beneath shelf mount	MT600BS
Delivery System, top shelf mount	MT600TS
Suction added to delivery head	1408-CS
Tapmaster foot control	IP-TMC

Select Countertop Options

Laminate countertop

Select Colors

Countertop: _____

Cabinets: _____

PVC: _____

Pulls: _____

Cabinet TOTAL: $ _____

Dimensions	In Inches
Length	116"
Depth	38"
Height	75"
Counter Height	33 1/2"

Features

- 4 banks of five drawer cabinet
- Upper pass-thru tray cabinet
- Provisions for four dental units
- Cut and towel dispenser at each sink
- Convenience outlets at each station
- Pass-thru upper storage cabinets
- Stainless steel waste drops at each station
- Gooseneck faucets
- 3 glove dispensers at each sink
- Pass-thru storage at mid section
- Stainless steel sinks
- Separate base with leveling feet
- **Customizing Available**

Forest Packages
Chairs and Stools
Lights and Monitor Mounts
7000 Series
Delivery Systems
Simplified
Factory Options and Parts
General Information
Equipment Warranty
Radiance Operatory
Imagine + Operatory
Operatory Mobile
Sterilization Centers
Orthodontic Cabinetry
Reception/Front Desk Cabinetry
Color Options
Cabinet Warranty
Compressors
Dry Vacuums
Tanks
Wet Vacuums
Utility Room Accessories
Utility Warranty

IP-AM-6-OR

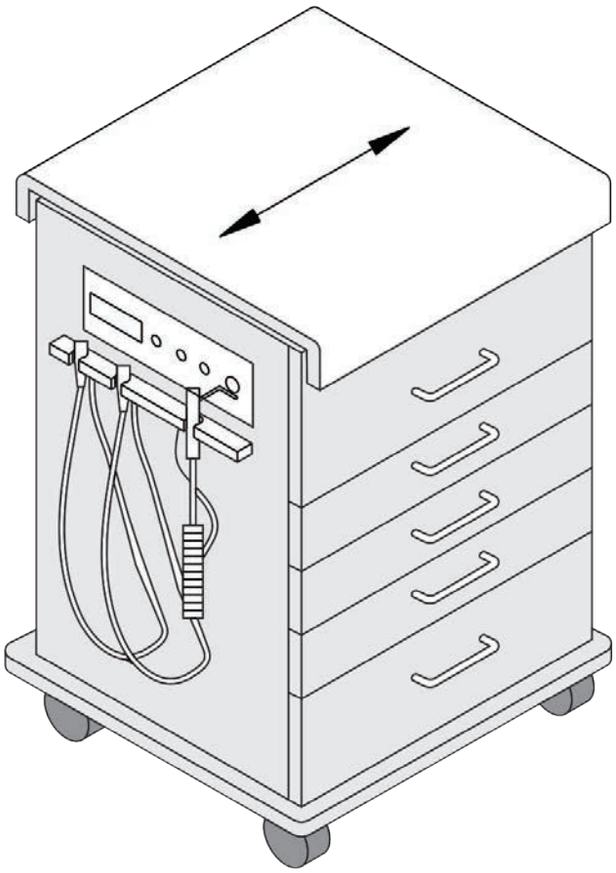

Orthodontic 5 Bay Island

Description	Part Number
Ortho Cabinet with 2 Handpiece Automatic Unit	IP-AM-6-OR

Select Options

Description	Part Number
Solid surface top -No Charge	IP-AM-6-OR/SS
Fiber Optics for one handpiece	1700-021-CS
Water bottle	IP-WBOT

Select Colors

Countertop: _____

Cabinets: _____

PVC: _____

Pulls: _____

Cabinet TOTAL: $ _____

Dimensions	In Inches
Height	31 1/8"
Width	21 1/4"
Depth	20 1/2"

Features

- Includes 1/2" solid surface top
- 8 1/2" Deep equipment well
- Four drawers
  - 3 drawers - 3 5/8"
  - 1 drawer - 6 3/8"
- Metabox drawer system
- 2 Handpiece automatic control-w/water bottle
- HVE, SE, Vacuum canister
- Utility center
- Non-retraction water coolant
- Master on/off with visual indicator
- Disc-type foot control
- Remote mounted hanging bar
- Three-way syringe
- Manual shut-off valves
- Air and water filters and regulators
- 7' Umbilical

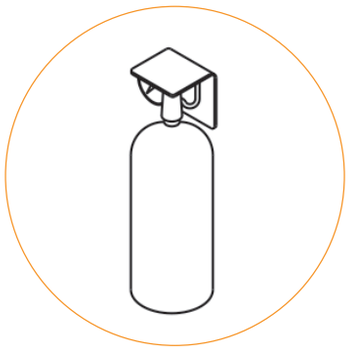

IP-WBOT

Forest Packages
Chairs and Stools
Lights and Monitor Mounts
7000 Series
Delivery Systems
Simplified
Factory Options and Parts
General Information
Equipment Warranty
Radiance Operatory
Imagine + Operatory
Operatory Mobile
Sterilization Centers
Orthodontic Cabinetry
Reception/Front Desk Cabinetry
Color Options
Cabinet Warranty
Compressors
Dry Vacuums
Tanks
Wet Vacuums
Utility Room Accessories
Utility Warranty

IP-BRU-02

Brushing Station

Description	Part Number
Includes 1 inch Solid Surface Top,sinks and faucets	IP-BRU-02

Dimensions	In Inches
Width	57"
Depth	19"
Counter Height	33 1/2"

Features

- Double bowl brushing station
- Solid Surface Countertop
- Soft Close Doors
- Two 13” round stainless steel sinks with single lever faucets and chrome strainer
- Waste drop with 36qt container below
- Toothbrush holder mounted in countertop
- Separate base with leveling feet

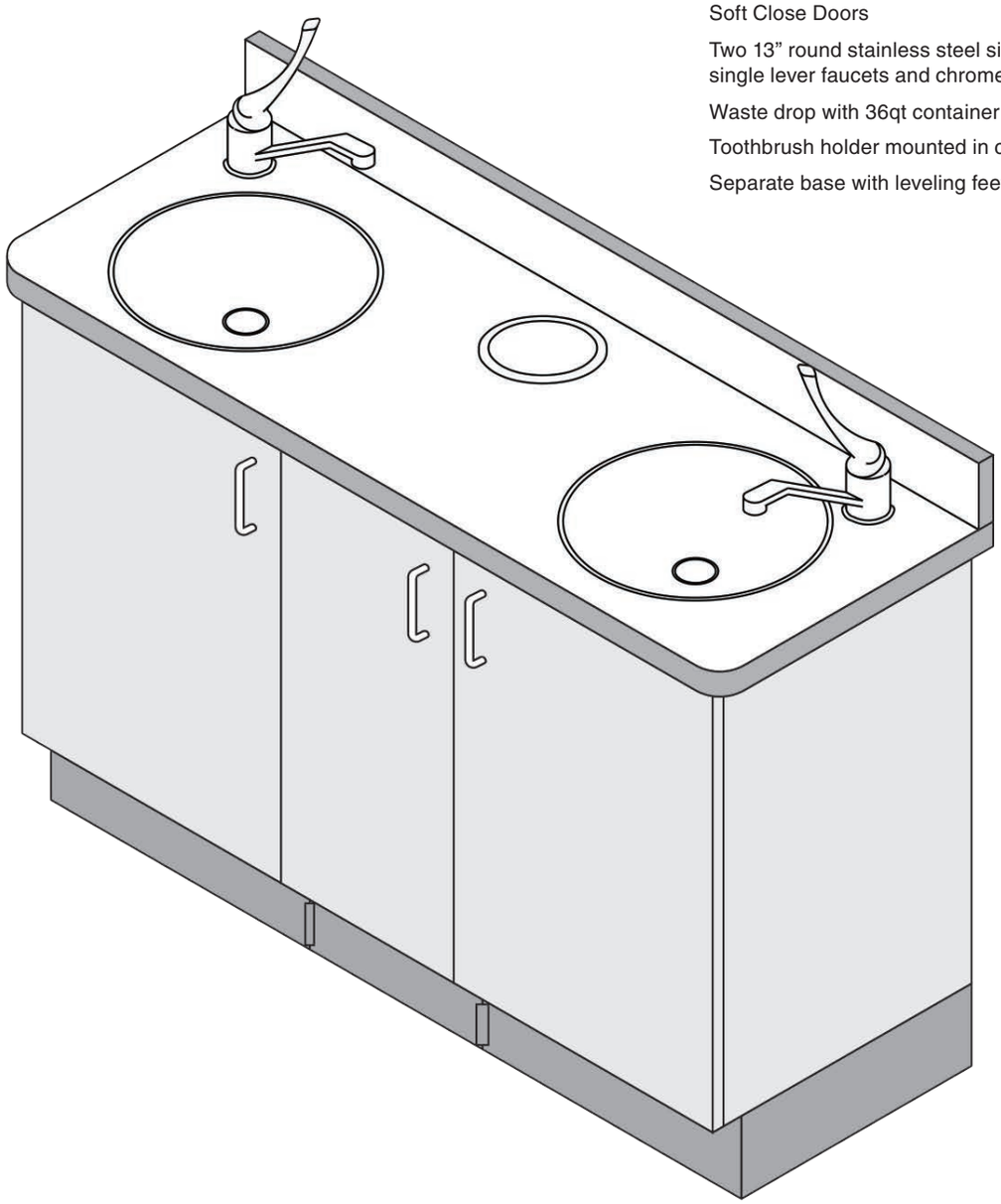

Forest Packages
Chairs and Stools
Lights and Monitor Mounts
7000 Series
Delivery Systems
Simplified
Factory Options and Parts
General Information
Equipment Warranty
Radiance Operatory
Imagine + Operatory
Operatory Mobile
Sterilization Centers
Orthodontic Cabinetry
Reception/Front Desk Cabinetry
Color Options
Cabinet Warranty
Compressors
Dry Vacuums
Tanks
Wet Vacuums
Utility Room Accessories
Utility Warranty

IP-BRU-03

Brushing Station

Description	Part Number
Includes 1 inch Solid Surface Top,sinks and faucets	IP-BRU-03

Dimensions	In Inches
Width	86 1/2"
Depth	19"
Counter Height	30 1/4", 33 1/2", 36 1/4"

Features

- Three tier brushing station
- (3) 13” round stainless steel sinks with single lever faucets and chrome strainer
- Soft Close Doors
- Waste drops at each sink with 36qt container below
- Curved base end unit for additional storage
- Separate base with leveling feet
- **Customizing Available**

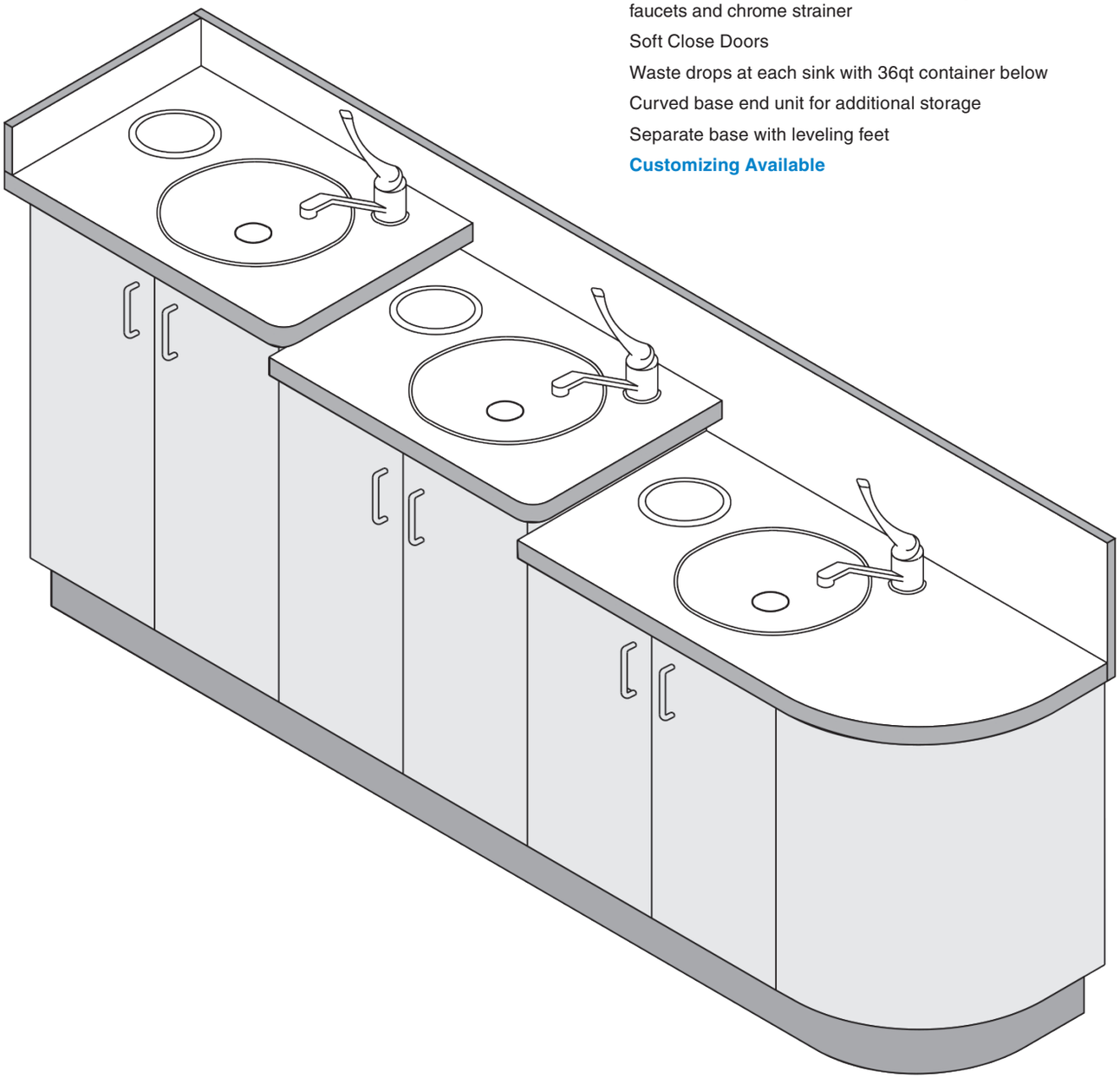

Forest Packages
Chairs and Stools
Lights and Monitor Mounts
7000 Series
Delivery Systems
Simplified
Factory Options and Parts
General Information
Equipment Warranty
Radiance Operatory
Imagine + Operatory
Operatory Mobile
Sterilization Centers
Orthodontic Cabinetry
Reception/Front Desk Cabinetry
Color Options
Cabinet Warranty
Compressors
Dry Vacuums
Tanks
Wet Vacuums
Utility Room Accessories
Utility Warranty

IP-TSO, IP-TSR, IP-OTS and IP-UWCH

Chart Storage

Description	Part Number
Open Chart Storage	IP-TSO-3013-84

Dimensions	In Inches
Width	30"
Height	84"
Depth	13"

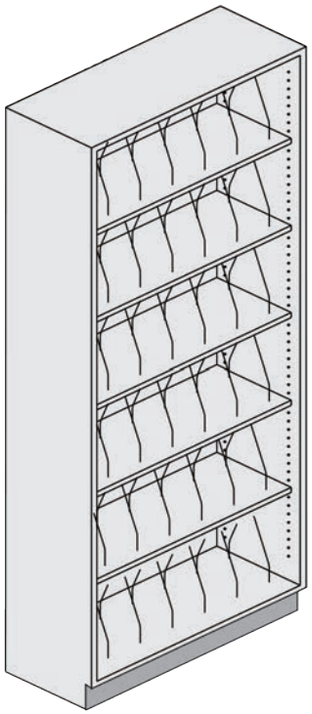

Chart Storage

Description	Part Number
Chart Storage - Chart file cabinet with retracting doors	IP-TSR-4914-93

Dimensions	In Inches
Width	49"
Height	84"
Depth	14"

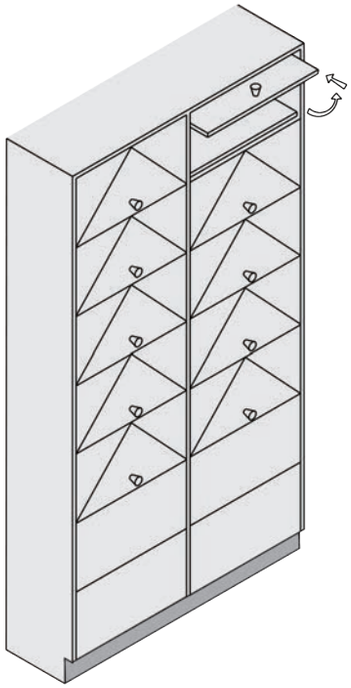

Chart Storage

Description	Part Number
Closed Chart Storage - Cabinet with four hinged doors	IP-OTS-3313-84

Dimensions	In Inches
Width	33"
Height	84"
Depth	14"

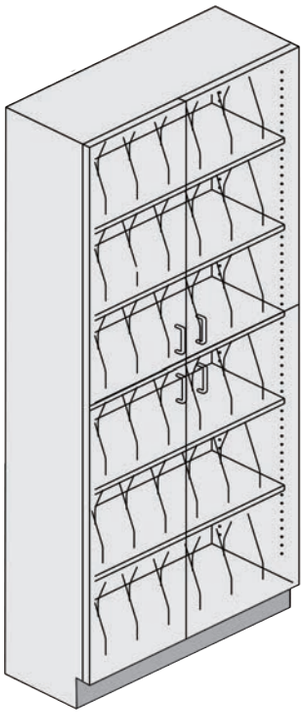

Chart Storage

Description	Part Number
Wall Hung Chart Storage	IP-UWCH-4239

Dimensions	In Inches
Width	42"
Height	39"
Depth	13"

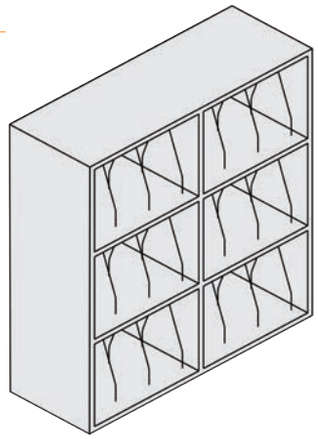

Forest Packages
Chairs and Stools
Lights and Monitor Mounts
7000 Series
Delivery Systems
Simplified
Factory Options and Parts
General Information
Equipment Warranty
Radiance Operatory
Imagine + Operatory
Operatory Mobile
Sterilization Centers
Orthodontic Cabinetry
Reception/Front Desk Cabinetry
Color Options
Cabinet Warranty
Compressors
Dry Vacuums
Tanks
Wet Vacuums
Utility Room Accessories
Utility Warranty

Imagine +

Reception/ Business Area

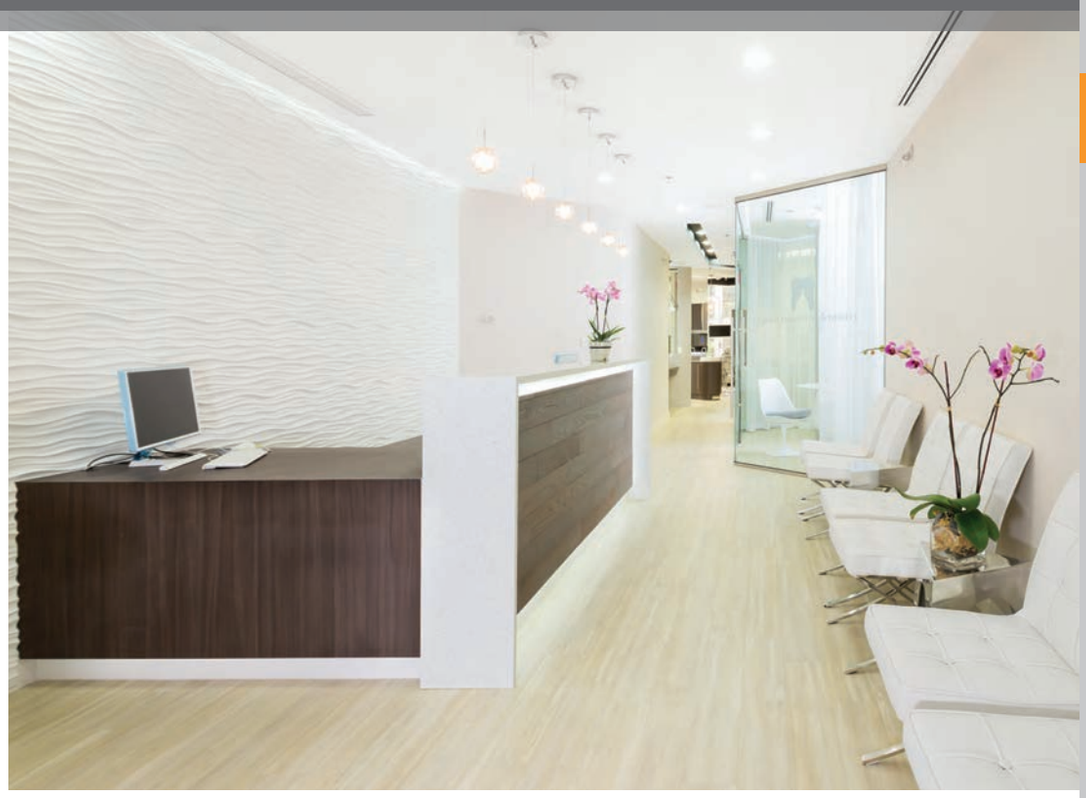

Forest Packages
Chairs and Stools
Lights and Monitor Mounts
7000 Series
Delivery Systems
Simplified
Factory Options and Parts
General Information
Equipment Warranty
Radiance Operatory
Imagine + Operatory
Operatory Mobile
Sterilization Centers
Orthodontic Cabinetry
Reception/Front Desk Cabinetry
Color Options
Cabinet Warranty
Compressors
Dry Vacuums
Tanks
Wet Vacuums
Utility Room Accessories
Utility Warranty

Desks

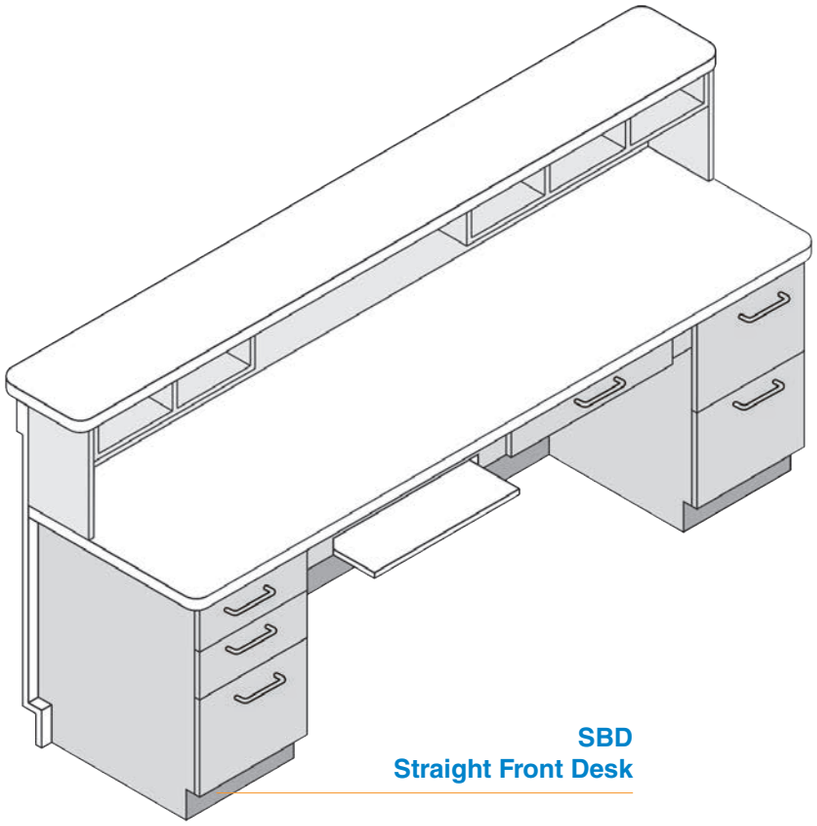

SBD
Straight Front Desk

Straight Front Desk

Description	Part Number
Straight Business Front Desk	SBD

Dimensions	In Inches
Length	96"
Depth	28"
Counter Height	30 1/4"
Check Writer Height	46"

Features

- BFC-3 three drawer base file cabinet
- BFC-2 two drawer base file cabinet
- KB-24 Keyboard pullout
- PD-24 pencil drawer
- Pigeon hole units
- Business desk counter top
- Business transaction center

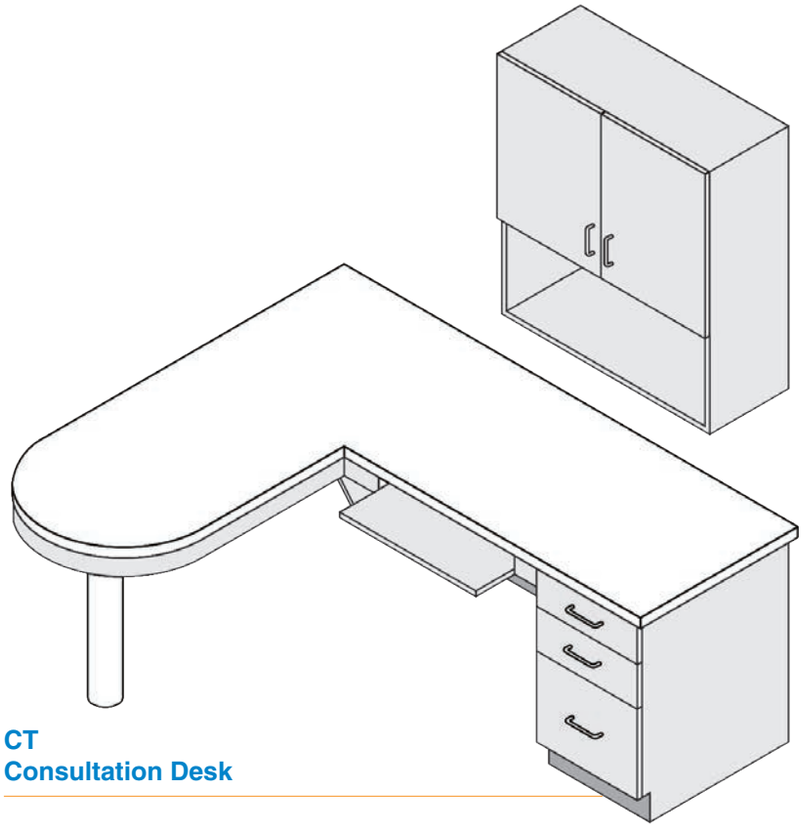

CT
Consultation Desk

Consultation Desk

Description	Part Number
Consultation Desk	CT

Dimensions	In Inches
Length	60"
Depth	30"
Height	30 1/4"

Features

- ”L” shape counter top with full radius on end
- Cylinder leg support

Forest Packages
Chairs and Stools
Lights and Monitor Mounts
7000 Series
Delivery Systems
Simplified
Factory Options and Parts
General Information
Equipment Warranty
Radiance Operatory
Imagine + Operatory
Operatory Mobile
Sterilization Centers
Orthodontic Cabinetry
Reception/Front Desk Cabinetry
Color Options
Cabinet Warranty
Compressors
Dry Vacuums
Tanks
Wet Vacuums
Utility Room Accessories
Utility Warranty

Desks

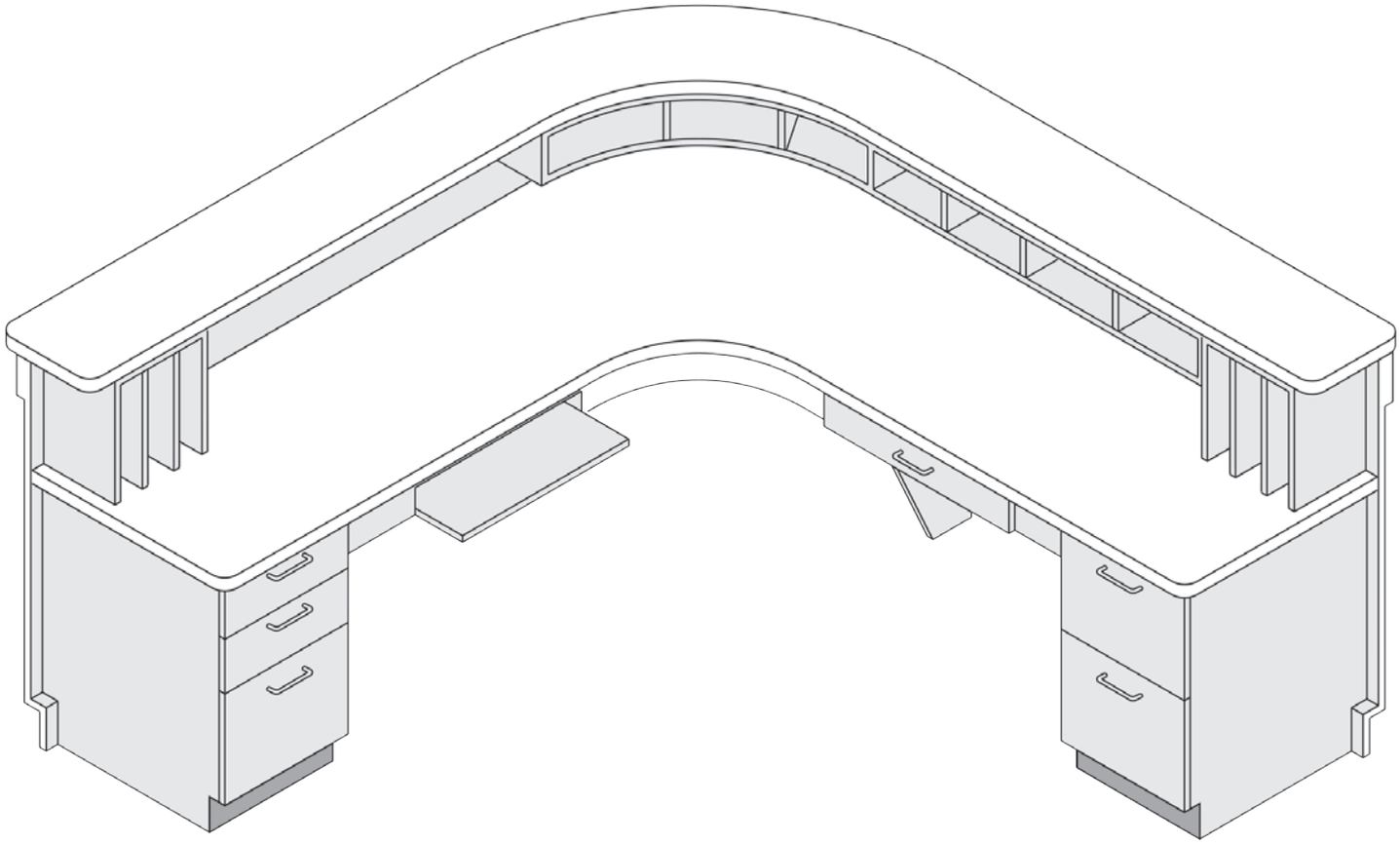

Curved Business Desk

Description	Part Number
Curved Business Desk	CBD

Dimensions	In Inches
Length	82"
Depth	82"
Counter Height	30 1/4"
Check Writer Height	46"

Features

- BFC-3 three drawer base file cabinet
- BFC-2 two drawer base file cabinet
- KB-24 Keyboard pullout
- PD-24 pencil drawer
- CRD two chart rack files
- Pigeon hole units
- Business desk counter top
- Business transaction center
- Two leg brace
- ILS face wall

Forest Packages
Chairs and Stools
Lights and Monitor Mounts
7000 Series
Delivery Systems
Simplified
Factory Options and Parts
General Information
Equipment Warranty
Radiance Operatory
Imagine + Operatory
Operatory Mobile
Sterilization Centers
Orthodontic Cabinetry
Reception/Front Desk Cabinetry
Color Options
Cabinet Warranty
Compressors
Dry Vacuums
Tanks
Wet Vacuums
Utility Room Accessories
Utility Warranty

Curved Front Desk Exterior Concepts

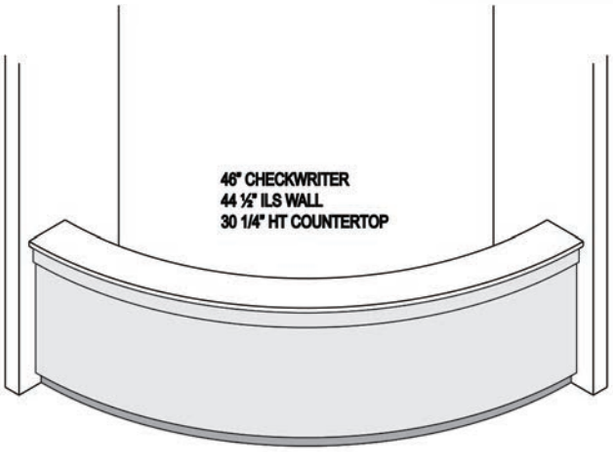

Typical Wall

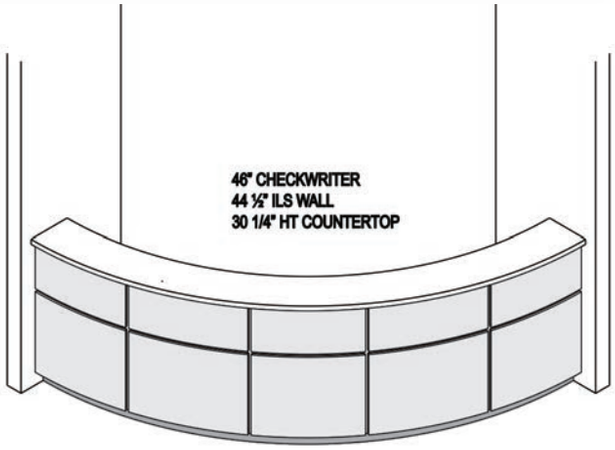

Wall With 1/3 & 2/3 Panels

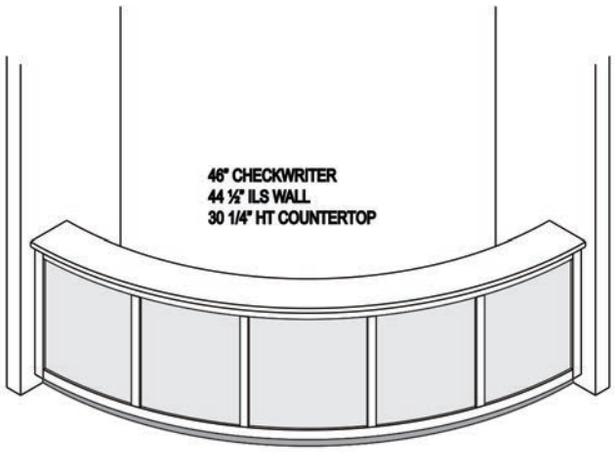

Wall With Recess Panels

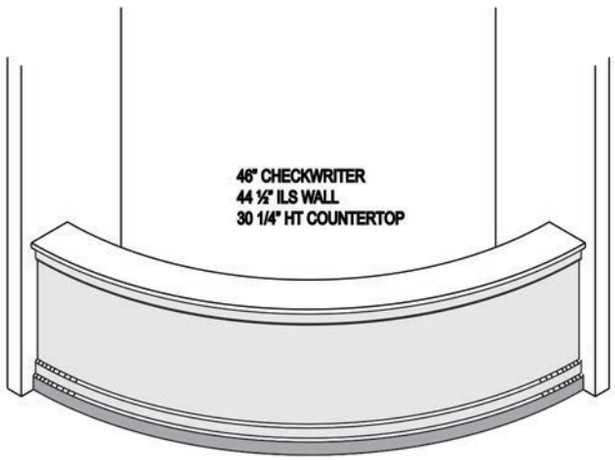

Wall With Base Molding

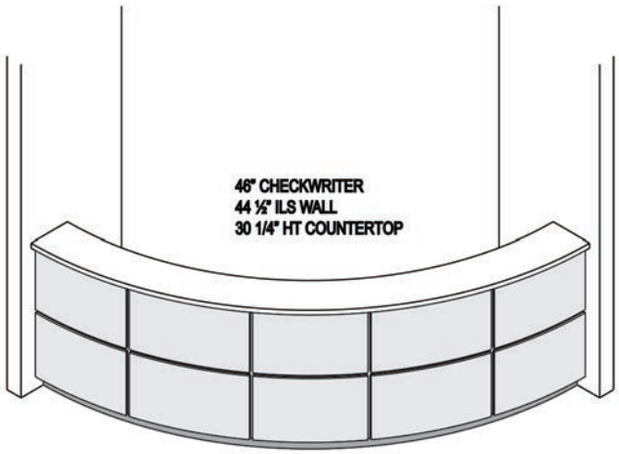

Wall With Equal Panels

Forest Packages
Chairs and Stools
Lights and Monitor Mounts
7000 Series
Delivery Systems
Simplified
Factory Options and Parts
General Information
Equipment Warranty
Radiance Operatory
Imagine + Operatory
Operatory Mobile
Sterilization Centers
Orthodontic Cabinetry
Reception/Front Desk Cabinetry
Color Options
Cabinet Warranty
Compressors
Dry Vacuums
Tanks
Wet Vacuums
Utility Room Accessories
Utility Warranty

Straight Front Desk Exterior Concepts

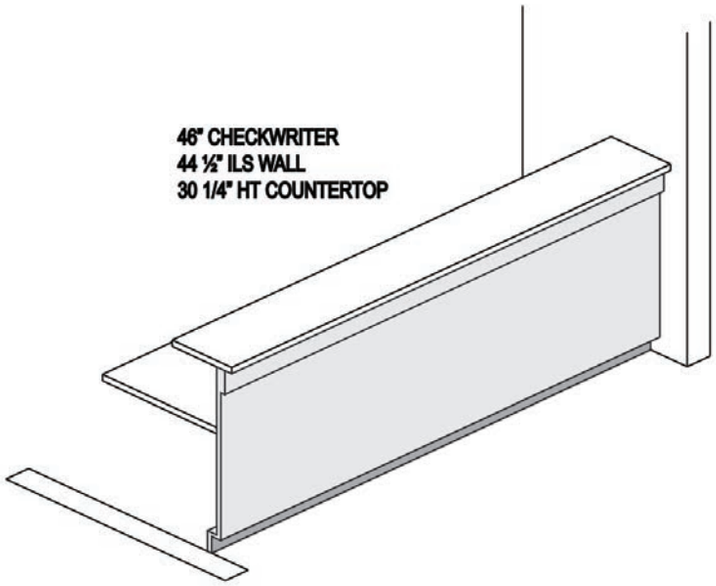

Typical Wall

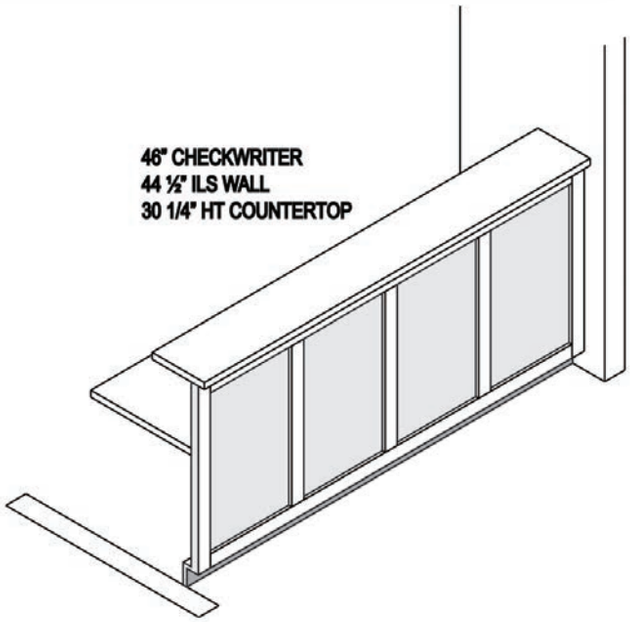

Wall With Recess Panels

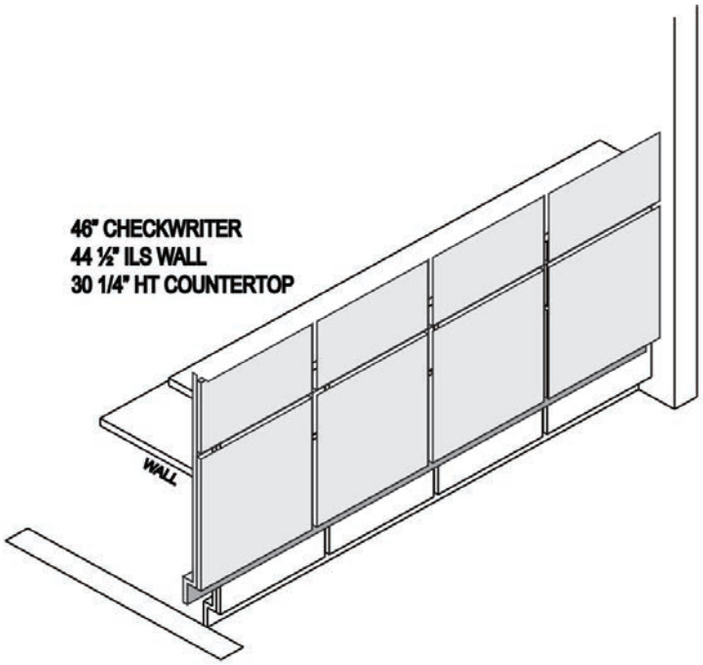

Wall With 1/3 & 2/3 Panels

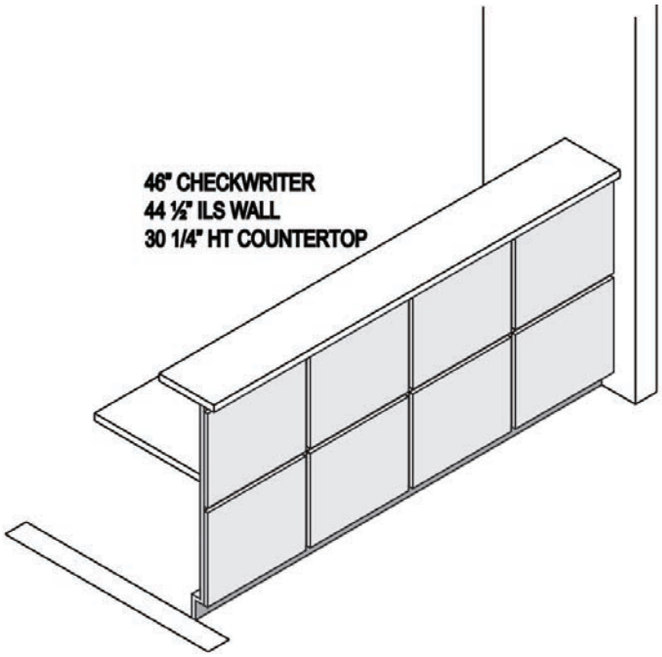

Wall With Equal Panels

Forest Packages
Chairs and Stools
Lights and Monitor Mounts
7000 Series
Delivery Systems
Simplified
Factory Options and Parts
General Information
Equipment Warranty
Radiance Operatory
Imagine + Operatory
Operatory Mobile
Sterilization Centers
Orthodontic Cabinetry
Reception/Front Desk Cabinetry
Color Options
Cabinet Warranty
Compressors
Dry Vacuums
Tanks
Wet Vacuums
Utility Room Accessories
Utility Warranty

Imagine +

Accessories & Delivery Systems

See our Forest Delivery Unit section. (starting on page 51)

Forest Packages
Chairs and Stools
Lights and Monitor Mounts
7000 Series
Delivery Systems
Simplified
Factory Options and Parts
General Information
Equipment Warranty
Radiance Operatory
Imagine + Operatory
Operatory Mobile
Sterilization Centers
Orthodontic Cabinetry
Reception/Front Desk Cabinetry
Color Options
Cabinet Warranty
Compressors
Dry Vacuums
Tanks
Wet Vacuums
Utility Room Accessories
Utility Warranty

Cabinet Laminate Color Selections

Windsor Mahogany

Derring Forest

Tuscan Walnut

Veranda Teak W/A

Asian Night

Brazilwood

Studio Teak

White Cypress

Phantom Pearl

Vapor Strandz

Grey

Linen

Cocobala

5th Avenue Elm

North Sea

Phantom Ecru

Phantom Charcoal

Designer White

Shadow

Skyline Walnut

Nightfall

Cabinet Countertop Color Selections

Midnight Melange
Mink Concrete
Frosty White Mirage
Designer White
Coconut Oil
Moonscape Quartz
Sea Oat Quartz
Whitewater
Soothing Grey
Zen Grey

Sandy Riverstorm
Milk Glass Spectra
Grey Beola
Bluestone
White Granite
Silver Smoke
Desert Sand
Graphite Granite
Grey Granite
Wallowa

Silver Grey
Artista Grey
Antarctica Corian
Artic Melange Wilsonart
Baja Melange Wilsonart
Moonstone Meganite
Platinum Granite Maganite
Rocky Road Granite Maganite
Silver Mist Maganite
Starry Starry Night Maganite

Forest Packages
Chairs and Stools
Lights and Monitor Mounts
7000 Series
Delivery Systems
Simplified
Factory Options and Parts
General Information
Equipment Warranty
Radiance Operatory
Imagine + Operatory
Operatory Mobile
Sterilization Centers
Orthodontic Cabinetry
Reception/Front Desk Cabinetry
Color Options
Cabinet Warranty
Compressors
Dry Vacuums
Tanks
Wet Vacuums
Utility Room Accessories
Utility Warranty

- All orders must be placed through an authorized DENTALEZ Dealer.
- Orders taken by phone are processed according to our understanding of your verbal instructions.
- Please include the following information with your order.

Purchase Order Number	Color of Cabinets
Shipping Address Shipping	Color of Tops
Date Required Method of	Color of Accent Panels (where applicable)
Shipping Quantity	Accessories and Options
Model and/or Part Number	Pulls or Touch latches (If Pulls give Color)
Description	

- To ensure that your order is processed correctly, we suggest that your order be accompanied by a layout indicating the overall top dimensions and cabinet arrangement.
- DENTALEZ can supply custom work. Please contact the factory with your special requirements.
- We are constantly striving to improve our products, and we reserve the right to make modifications without the need for prior notification. Nor are we obligated to modify previously manufactured items. Every order received by phone is acknowledged in writing. It is your responsibility to check acknowledgments. Carefully against your order to ascertain it is correct.

ELECTRICAL
- All outlets are UL approved, 20 amp.

TERMS
- All payments are Net 30 days.
- A service charge of 2% per month will be charged on accounts over 30 days.
- Customer is responsible for payment of all costs and expenses of collection of any debt to DENTALEZ including but not limited to attorney fees, court costs, and any other costs associated with collection.

SHIPPING
- Carrier is responsible for damage or loss in transit. Any external damage should be noted on receipt as "received in bad condition" and contact carrier (within 2 days) and arrange for inspection. If concealed damage is found when cabinets are unpacked, a "request for inspection" to the carrier must be made within 10 days.
- Unless exact shipping instructions are indicated with your order, shipment will be determined by DENTALEZ
- All shipments are made F.O.B. Cinnaminson, NJ, freight collect unless otherwise specified.

RETURN POLICY
- Cabinets will not be accepted for return without prior authorization. If written consent is given for a return, credit will be issued for the original invoice price less transportation cost, less 15% restocking charge.
- Custom designed cabinets or special colors (non standard) are not returnable.
- You must supply copy of original invoice and reasons for return with your return authorization request.
- All cancellations must be confirmed in writing. Any order in process at the time the cancellation is received is subject to a charge of 15% or more, depending on the amount of work completed.

WARRANTY
- DENTALEZ warrants its products to be free from defects in material and workmanship and agrees to remedy any such defect, or to furnish a new or equal part in exchange. Staining, discoloration, or deterioration of laminate caused by disinfectant solutions, X-ray processing solutions, and other solvents and chemicals are not covered under this warranty. No other warranties are expressed or implied. This warranty shall extend for five years from date of original purchase, provided such product is used for the purpose for which it is intended, and the damage is not the result of abuse or misuse. This warranty does not cover damage resulting from improper installation, or accidents incurred in shipping and handling.

DISCLAIMER
- DENTALEZ reserves the right to change, modify or delete any product and/or price without prior notice. DENTALEZ is not responsible for typographical errors in this catalog.

CUSTOMER SERVICE
- DENTALEZ customer service is available by phone Monday thru Friday, 8:00 am to 5:00 pm, EST.
- In the event that you experience difficulty with the application or operation of any of our products, please contact our customer service department at our expense at 866.DTE.INFO.

Forest Packages
Chairs and Stools
Lights and Monitor Mounts
7000 Series
Delivery Systems
Simplified
Factory Options and Parts
General Information
Equipment Warranty
Radiance Operatory
Imagine + Operatory
Operatory Mobile
Sterilization Centers
Orthodontic Cabinetry
Reception/Front Desk Cabinetry
Color Options
Cabinet Warranty
Compressors
Dry Vacuums
Tanks
Wet Vacuums
Utility Room Accessories
Utility Warranty

Notes

Forest Packages
Chairs and Stools
Lights and Monitor Mounts
7000 Series
Delivery Systems
Simplified
Factory Options and Parts
General Information
Equipment Warranty
Radiance Operatory
Imagine + Operatory
Operatory Mobile
Sterilization Centers
Orthodontic Cabinetry
Reception/Front Desk Cabinetry
Color Options
Cabinet Warranty
Compressors
Dry Vacuums
Tanks
Wet Vacuums
Utility Room Accessories
Utility Warranty

Ramvac
UTILITY

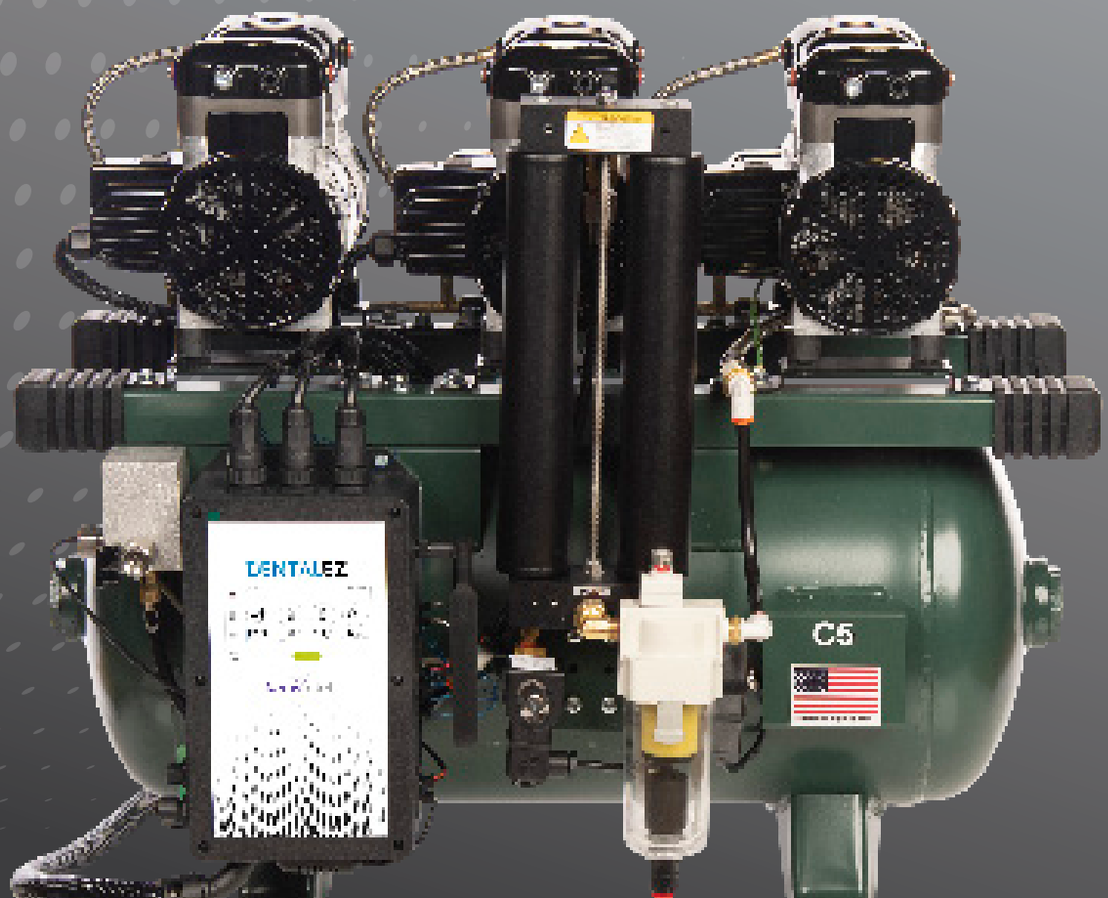

Forest Packages
Chairs and Stools
Lights and Monitor Mounts
7000 Series
Delivery Systems
Simplified
Factory Options and Parts
General Information
Equipment Warranty
Radiance Operatory
Imagine + Operatory
Operatory Mobile
Sterilization Centers
Orthodontic Cabinetry
Reception/Front Desk Cabinetry
Color Options
Cabinet Warranty
Compressors
Dry Vacuums
Tanks
Wet Vacuums
Utility Room Accessories
Utility Warranty

KNOW BEFORE
AT NO CHARGE!

Ramvac DENTALEZ

Our dual voltage compressor is:

SMART-ENABLED

Every Compressor includes the ability to monitor the health of your equipment and be notified before something happens

DUAL-VOLTAGE

Can work with both 115 or 230-volt electrical installations

OUR QUIETEST COMPRESSOR

No need for bulky sound covers, our integrated Sound Shield provides a sound level that is quiet as a conversation

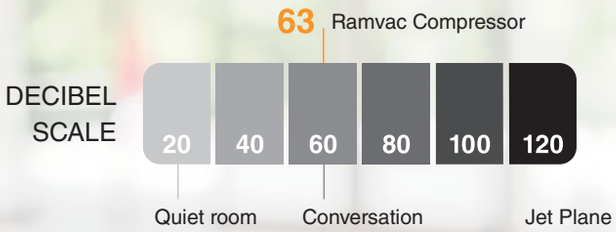

CLEAN AND DRY AIR

Dry air prevents bacteria growth and air is filtered to 0.01 microns trapping most airborne microbes

BEST WARRANTY

Leading 6-year warranty on all parts

Forest Packages
Chairs and Stools
Lights and Monitor Mounts
7000 Series
Delivery Systems
Simplified
Factory Options and Parts
General Information
Equipment Warranty
Radiance Operatory
Imagine + Operatory
Operatory Mobile
Sterilization Centers
Orthodontic Cabinetry
Reception/Front Desk Cabinetry
Color Options
Cabinet Warranty
Compressors
Dry Vacuums
Tanks
Wet Vacuums
Utility Room Accessories
Utility Warranty

UTILITY

Compressors **192**

Ramvac Compressors 192

Dry Vacuums **195**

Dry Vacuums 195

Badger LF 197

Tanks **198**

15 Gallon and 30 Gallon Tanks 198

InfiniTank 198

Wet Vacuums **199**

Barracuda 199

Maintenance **201**

Compressor and Vacuum Maintenance 201

Utility Room Accessories **202**

Remote Panels 202

Master Water Control Valve 202

Steel Frame Stands 202

Amalgam Separator 203

VACHECK / FLOWCHECK 203

SlugBuster 203

Quick Reference Guide **204**

Utility Warranty **206**

Ramvac DENTALEZ

KNOW BEFORE ***AT NO CHARGE!***

Nomenclature Key

Series Name	Max Number of Users	Max Input Power
C = Ramvac® Compressor	3 = up to 3 users	12 = 115 volts or 230v
SS = Sound Shield included	5 = up to 5 users	2 = 230 volts
	8 = up to 8 users	
	12 = up to 12 users	
	18 = up to 18 users	

Sizing Guide

Model Number	Description	Number of Users	Number of Heads	Sound Shield
C3-12	Ramvac 3 Compressor	3	2	8658-016 (x2)
C3-12SS	Ramvac 3 Compressor w/Sound Shield	3	2	Included
C5-12	Ramvac 5 Compressor	5	3	8658-016 (x3)
C5-12SS	Ramvac 5 Compressor w/Sound Shield	5	3	Included
C8-2	Ramvac 8 Compressor	8	2	8625-022 (x2)
C8-2SS	Ramvac 8 Compressor w/Sound Shield	8	2	Included
C12-2	Ramvac 12 Compressor	12	2	8625-022 (x2)
C12-2SS	Ramvac 12 Compressor w/Sound Shield	12	2	Included
C18-2	Ramvac 18 Compressor	18	3	8625-022 (x3)
C18-2SS	Ramvac 18 Compressor w/Sound Shield	18	3	Included

Ramvac Compressor without sound shield

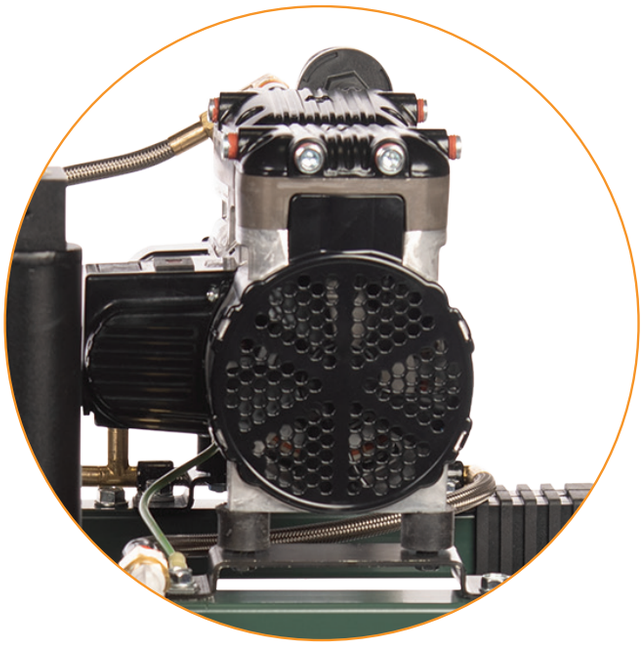

Ramvac Compressor with sound shield

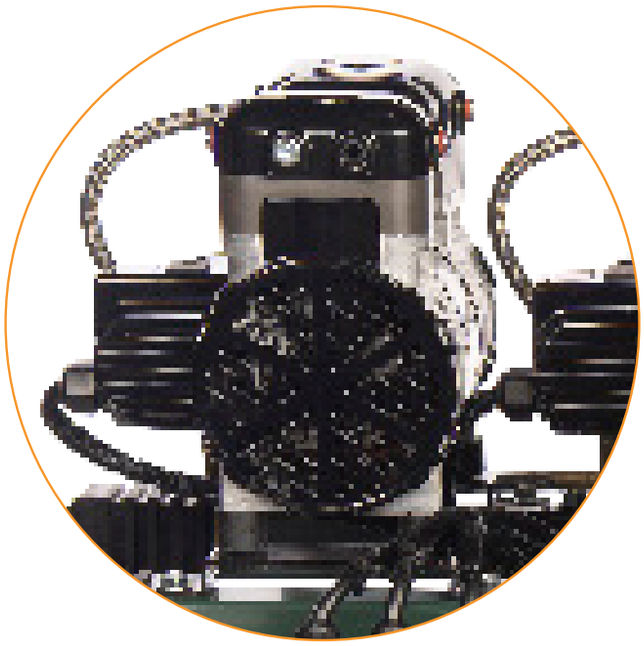

NOTES:
Note for all compressors: Pressure is 85-115 PSI. High-Pressure Mode is 105-125 PSI.
Pump Up Cycle Time, 85 to 115 PSI (Sec) is 40-60.

Forest Packages
Chairs and Stools
Lights and Monitor Mounts
7000 Series
Delivery Systems
Simplified
Factory Options and Parts
General Information
Equipment Warranty
Radiance Operatory
Imagine + Operatory
Operatory Mobile
Sterilization Centers
Orthodontic Cabinetry
Reception/Front Desk Cabinetry
Color Options
Cabinet Warranty
Compressors
Dry Vacuums
Tanks
Wet Vacuums
Utility Room Accessories
Utility Warranty

Electrical Requirements

Model Number	Description	Voltage	Amps	Breaker Size	Total HP
C3-12	Ramvac 3 Compressor	115v / 230v	12 / 6.1	15 amp	1.0
C3-12SS	Ramvac 3 Compressor w/Sound Shield	115v / 230v	12 / 6.1	15 amp	1.0
C5-12	Ramvac 5 Compressor	115v / 230v	17.6 / 9	20 / 15 amp	1.5
C5-12SS	Ramvac 5 Compressor w/Sound Shield	115v / 230v	17.6 / 9	20 / 15 amp	1.5
C8-2	Ramvac 8 Compressor	230v	16	20 amp	4
C8-2SS	Ramvac 8 Compressor w/Sound Shield	230v	16	20 amp	4
C12-2	Ramvac 12 Compressor	230v	21	30 amp	4
C12-2SS	Ramvac 12 Compressor w/Sound Shield	230v	21	30 amp	4
C18-2	Ramvac 18 Compressor	230v	30.5	40 amp	6
C18-2SS	Ramvac 18 Compressor w/Sound Shield	230v	30.5	40 amp	6

Weight and Dimensions

Model Number	Description	Weight (lbs)	Dimensions W x D x H (in)	Dimensions w Sound Shield W x D x H (in)	Tank Size (Gallon)
C3-12	Ramvac 3 Compressor	136	30” x 21” x 26”	NA	12
C3-12SS	Ramvac 3 Compressor w/Sound Shield	136	NA	30” x 20” x 26”	12
C5-12	Ramvac 5 Compressor	149	30” x 21” x 26”	NA	12
C5-12SS	Ramvac 5 Compressor w/Sound Shield	149	NA	30” x 20” x 26”	12
C8-2	Ramvac 8 Compressor	230	35” x 25” x 31”	NA	20
C8-2SS	Ramvac 8 Compressor w/Sound Shield	230	NA	35” x 25” x 31”	20
C12-2	Ramvac 12 Compressor	230	35” x 25” x 31”	NA	20
C12-2SS	Ramvac 12 Compressor w/Sound Shield	230	NA	35” x 25” x 31”	20
C18-2	Ramvac 18 Compressor	335	41” x 29” x 32”	NA	30
C18-2SS	Ramvac 18 Compressor w/Sound Shield	335	NA	41” x 29” x 32”	30

Ramvac Compressors

Ramvac 3 Compressor
Part Number C3-12

Ramvac 3 Compressor with Sound Shield
Part Number C3-12SS

Ramvac 5 Compressor
Part Number C5-12

Ramvac 5 Compressor with Sound Shield
Part Number C5-12SS

NOTES:
Note for all compressors: Pressure is 85-115 PSI. High-Pressure Mode is 105-125 PSI.
Pump Up Cycle Time, 85 to 115 PSI (Sec) is 40-60.

TABLE OF CONTENTS

Forest Packages
Chairs and Stools
Lights and Monitor Mounts
7000 Series
Delivery Systems
Simplified
Factory Options and Parts
General Information
Equipment Warranty
Radiance Operatory
Imagine + Operatory
Operatory Mobile
Sterilization Centers
Orthodontic Cabinetry
Reception/Front Desk Cabinetry
Color Options
Cabinet Warranty
Compressors
Dry Vacuums
Tanks
Wet Vacuums
Utility Room Accessories
Utility Warranty

Ramvac Compressors

Ramvac 8 Compressor
Part Number C8-2

Ramvac 8 Compressor with Sound Shield
Part Number C8-2SS

Ramvac 12 Compressor
Part Number C12-2

Ramvac 12 Compressor with Sound Shield
Part Number C12-2SS

Ramvac 18 Compressor
Part Number C18-2

Ramvac 18 Compressor with Sound Shield
Part Number C18-2SS

See page 201 for maintenance parts.

Forest Packages
Chairs and Stools
Lights and Monitor Mounts
7000 Series
Delivery Systems
Simplified
Factory Options and Parts
General Information
Equipment Warranty
Radiance Operatory
Imagine + Operatory
Operatory Mobile
Sterilization Centers
Orthodontic Cabinetry
Reception/Front Desk Cabinetry
Color Options
Cabinet Warranty
Compressors
Dry Vacuums
Tanks
Wet Vacuums
Utility Room Accessories
Utility Warranty

Ramvac DENTALEZ

KNOW BEFORE ***AT NO CHARGE!***

Nomenclature Key

Series Name	Max Number of Users	Max Input Power	Tank Included
RV = Ramvac® Dry Vac	4 = up to 4 users	12 = 115v or 230v	T = tank included
	5 = up to 5 users	2 = 230v	
	7 = up to 7 users	23 = 230v 3 phase	
	10 = up to 10 users	43 = 460v 3 phase	
	12 = up to 12 users		

Sizing Guide: 1 HVE = 1 user, 1 SE = 1/5 user, Nitrous scavenger = 1/4 user

Sizing Guide

Model Number	Description	Users	Breaker Size
RV4-12T	Ramvac 4 Dry Vacuum System (Bulldog QT 2)	4	15 amp
RV5-2T	Ramvac 5 Dry Vacuum System (Bison 3)	5	20 amp
RV7-2T	Ramvac 7 Dry Vacuum System (Bison 5)	7	20 amp
RV7-23T	Ramvac 7 Dry Vacuum System (Bison 5)	7	15 amp
RV10-2T	Ramvac 10 Dry Vacuum System (Bison 7)	10	20 amp
RV10-23T	Ramvac 10 Dry Vacuum System (Bison 7)	10	15 amp
RV12-23T	Ramvac 12 Dry Vacuum System (Bison 9)	12	20 amp
RV12-43T	Ramvac 12 Dry Vacuum System (Bison 9)	12	15 amp

All Ramvac Vacuum Systems (pump and tank) except RV4-12T include a platform (575056) for stacking.

Electrical Requirements

Model Number	Description	Output Power	Input Power	Max Amps
RV4-12T	Ramvac 4 Dry Vacuum System (Bulldog QT 2)	1 hp (0.745kW)	115v or 230v, 1 ph 60 Hz	9 @ 115v, 4.5 @ 230v
RV5-2T	Ramvac 5 Dry Vacuum System (Bison 3)	3 hp (2.2kW)	230v, 1 ph 60 Hz	16.0 @ 230v
RV7-2T	Ramvac 7 Dry Vacuum System (Bison 5)	3 hp (2.2kW)	230v, 1 ph 60 Hz	16.0 @ 230v
RV7-23T	Ramvac 7 Dry Vacuum System (Bison 5)	3 hp (2.2kW)	230v, 3 ph 60 Hz	8.4 @ 230v
RV10-2T	Ramvac 10 Dry Vacuum System (Bison 7)	3 hp (2.2kW)	230v, 1 ph 60 Hz	16.0 @ 230v
RV10-23T	Ramvac 10 Dry Vacuum System (Bison 7)	3 hp (2.2kW)	230v, 3 ph 60 Hz	8.4 @ 230v
RV12-23T	Ramvac 12 Dry Vacuum System (Bison 9)	5 hp (3.7kW)	230v, 3 ph 60 Hz	13.2 @ 230v
RV12-43T	Ramvac 12 Dry Vacuum System (Bison 9)	5 hp (3.7kW)	460v, 3 ph 60 Hz	6.6 @ 460v

Weight and Dimensions

Model Number	Description	Weight (lbs) Pump only	Dimensions (Pump only) W x D x H (in)	Stacked Dimensions (Pump and Tank) W x D x H (in)
RV4-12T	Ramvac 4 Dry Vacuum System (Bulldog QT 2)	200 lbs	25” x 17” x 28”	29” x 19” x 48”
RV5-2T	Ramvac 5 Dry Vacuum System (Bison 3)	345 lbs	26” x 19” x 31”	33” x 21” x 59”
RV7-2T	Ramvac 7 Dry Vacuum System (Bison 5)	345 lbs	26” x 19” x 31”	33” x 21” x 59”
RV7-23T	Ramvac 7 Dry Vacuum System (Bison 5)	345 lbs	26" x 19" x 31"	33" x 21" x 59"
RV10-2T	Ramvac 10 Dry Vacuum System (Bison 7)	395 lbs	26” x 22” x 31”	33” x 22” x 59”
RV10-23T	Ramvac 10 Dry Vacuum System (Bison 7)	395 lbs	26" x 22" x 31"	33" x 22" x 59"
RV12-23T	Ramvac 12 Dry Vacuum System (Bison 9)	395 lbs	26" x 22" x 31"	33" x 22" x 71"
RV12-43T	Ramvac 12 Dry Vacuum System (Bison 9)	395 lbs	26" x 22" x 31"	33" x 22" x 71"

NOTES:
Drain Valve Centerline to Floor

Forest Packages
Chairs and Stools
Lights and Monitor Mounts
7000 Series
Delivery Systems
Simplified
Factory Options and Parts
General Information
Equipment Warranty
Radiance Operatory
Imagine + Operatory
Operatory Mobile
Sterilization Centers
Orthodontic Cabinetry
Reception/Front Desk Cabinetry
Color Options
Cabinet Warranty
Compressors
Dry Vacuums
Tanks
Wet Vacuums
Utility Room Accessories
Utility Warranty

Ramvac Dry Vacuums

Ramvac 4 Dry Vacuum System

Part Number RV4-12T

Ramvac 5 Dry Vacuum System

Part Number RV5-2T

Ramvac 7 Dry Vacuum System

Part Number RV7-2T

Ramvac 10 Dry Vacuum System

Part Number RV10-2T

Ramvac 12 Dry Vacuum System

Part Number RV12-23T

Description	Part Number
Vacuum Only	
Ramvac 4 Dry Vacuum (Bulldog QT 2) 4 User/115V & 230V Single Phase	RV4-12
Ramvac 5 Dry Vacuum (Bison 3) 5 User 230V Single Phase	RV5-2
Ramvac 7 Dry Vacuum (Bison 5) 7 User 230V Single Phase	RV7-2
Ramvac 7 Dry Vacuum (Bison 5) 7 User 230V Three Phase	RV7-23
Ramvac 10 Dry Vacuum (Bison 7) 10 User 230V Single Phase	RV10-2
Ramvac 10 Dry Vacuum (Bison 7) 10 User 230V Three Phase	RV10-23
Ramvac 12 Dry Vacuum (Bison 9) 12 User 230V Three Phase	RV12-23
Ramvac 12 Dry Vacuum (Bison 9) 12 User 460V Three Phase	RV12-43

Description	Part Number
Vacuum System (with 30-gal tank and platform)	
Ramvac 5 Dry Vacuum System (Bison 3) 5 User 230V Single Phase	RV5-2T30
Ramvac 7 Dry Vacuum System (Bison 5) 7 User 230V Single Phase	RV7-2T30
Ramvac 10 Dry Vacuum System (Bison 7) 10 User 230V Single Phase	RV10-2T30
Ramvac 12 Dry Vacuum System (Bison 9) 12 User 230V Three Phase	RV12-23T
Ramvac 12 Dry Vacuum System (Bison 9) 12 User 460V Three Phase	RV12-43T

See page 201 for maintenance parts.

NOTES:
RV5-2T, RV7-2T, RV10-2T and RV12-23T include a platform.

Forest Packages
Chairs and Stools
Lights and Monitor Mounts
7000 Series
Delivery Systems
Simplified
Factory Options and Parts
General Information
Equipment Warranty
Radiance Operatory
Imagine + Operatory
Operatory Mobile
Sterilization Centers
Orthodontic Cabinetry
Reception/Front Desk Cabinetry
Color Options
Cabinet Warranty
Compressors
Dry Vacuums
Tanks
Wet Vacuums
Utility Room Accessories
Utility Warranty

Badger™ LF

The efficient, LubeFree dry vacuum system

- Compact LubeFree rotary vane pump with integrated 5 gallon tank
- Dental office can transition easily from wet to dry vacuum
- Open frame design means quick maintenance
- Saves 200,000 gallons of water annually
- 5 gallon polyethylene tank
- 2 year system warranty and 5 year pump warranty

Badger LF Dry Vacuum

Part Number BADGLF2

Badger Specifications

Power Requirements		Pump Specifications	
Users	4	HP	1.5 HP 1,200 rpm
Voltage	208-230 VAC, Single Phase	Weight	Unit: 175lbs Shipping: 195lb
Full Load	6.2A	Maximum Vacuum	15 in Hg
Frequency	60 Hz	Breaker Size	15amp
Exhaust Vent	2”		
Dimensions:	W25”xD18”xH24”		

Forest Packages
Chairs and Stools
Lights and Monitor Mounts
7000 Series
Delivery Systems
Simplified
Factory Options and Parts
General Information
Equipment Warranty
Radiance Operatory
Imagine + Operatory
Operatory Mobile
Sterilization Centers
Orthodontic Cabinetry
Reception/Front Desk Cabinetry
Color Options
Cabinet Warranty
Compressors
Dry Vacuums
Tanks
Wet Vacuums
Utility Room Accessories
Utility Warranty

Ramvac Tanks

- Store liquids and debris removed from the treatment room
- Tanks must be sized to correctly match the volume of liquids and debris removed during a vacuum operating cycle.

Specifications	15 Gallon	30 Gallon
Treatment Rooms*	1-6	7-12
W	29”	29”
D	19”	19”
H	24”	36”

15 Gallon Tank**
Part Number A575015

30 Gallon Tank**
Part Number A575030

Description	Part Number
Additional Options	
Ramvac Vacuum Sizes 5-12 Platform	575056
Suspension Set	575215
12" Height Extender	575212
Auxiliary Vacuum Adapter	590504

Ramvac Infini Tanks

Ramvac Infini Tank
Part Number A575080

InfiniTanks
- Simple maintenance free design
- Drains without vacuum interruption
- Significantly reduces the size and number of separating tanks
- Completely automated to provide worry free operation

Specifications	InfiniTank	InfiniTank-High Flow
Treatment Rooms*	1-20	1-20
W	29”	55”
D	21”	27”
H	38”	62”

50 Gallon Cylindrical Tank

50 Gallon Cylindrical Tank
Part Number 590053

50 Gallon Cylindrical Tank
- Easy to Install
- Reliable
- Fiberglass construction won’t corrode
- Clean-drain tapered bottom
- Clog resistant drain valve
- Omni-directional drain & pump connections

Specifications	
Treatment Rooms*	13-20
Includes	2” & 3” inlet & vacuum fittings, 3 each galvanized pipe legs, and drain valve
OD	26”
H	62”

NOTES:
* This assumes 1 chair per room. For bays, let “rooms”= chairs.
** Ramvac tanks include level sensor and cable interface to Ramvac Vacuum Control with Aeras.

Forest Packages
Chairs and Stools
Lights and Monitor Mounts
7000 Series
Delivery Systems
Simplified
Factory Options and Parts
General Information
Equipment Warranty
Radiance Operatory
Imagine + Operatory
Operatory Mobile
Sterilization Centers
Orthodontic Cabinetry
Reception/Front Desk Cabinetry
Color Options
Cabinet Warranty
Compressors
Dry Vacuums
Tanks
Wet Vacuums
Utility Room Accessories
Utility Warranty

Barracuda™

- **100% Dual Redundancy**
- Brass impeller and housing with sealed motor bearings for long life and chemical resistance
- 1 & 2 HP Water Injected Pump models available to meet a practice's specific requirements
- Optional water recirculator reduces water consumption by about 75%
- Two independent pumps to handle peak loads and back-up protection (Dual only)
- Maintains vacuum in peak work periods (Dual only)
- Provides back-up protection to minimize downtime (Dual only)
- Now with a 5 year limited warranty from date of installation.

Barracuda Single

Product Name	**Barracuda CV-101FS**	**Barracuda CV-101FSW**	**Barracuda CV-102FS**	**Barracuda CV-102FSW**
Recirculator	N/A	Included	N/A	Included
Horsepower	1x1 HP	1x1 HP	1x2 HP	1x2 HP
Volts	115 / 208-230	115 / 208-230	208-230	208-230
Amps (each motor)	13.2 / 7.2-6.6	13.2 / 7.2-6.6	11.9-10.7	11.9-10.7
Phase	Single	Single	Single	Single
RPM	3450	3450	3450	3450
Ambient Temperature	32°C / 104°F	32°C / 104°F	32°C / 104°F	32°C / 104°F
Cycle	60 Hz	60 Hz	60 Hz	60 Hz
Width	12"	12"	14"	14"
Depth	9"	9"	11"	11"
Height	16"	16"	20"	20"
Shipping Weight	68 lbs.	68 lbs.	78 lbs.	78 lbs.
Typical application	2 Users	2 Users	3 Users	3 Users
Breaker Size	20 amp	20 amp	20 amp	20 amp
Max sealed vacuum	Approximately 20-25 inches Hg Adjustable			

Barracuda CV-101FS

Barracuda Dual

Product Name	**Barracuda MC-201FS**	**Barracuda MC-201FSW**	**Barracuda MC-202FS**	**Barracuda MC-202FSW**
Recirculator	N/A	Included	N/A	Included
Horsepower	2 x 1 HP	2 x 1 HP	2 x 2 HP	2 x 2 HP
Volts	208-230	208-230	208-230	208-230
Amps (each motor)	7.5 each motor	7.5 each motor	15 each motor	15 each motor
Phase	Single	Single	Single	Single
RPM	3450	3450	3450	3450
Ambient Temperature	32°C / 104°F	32°C / 104°F	32°C / 104°F	32°C / 104°F
Cycle	60 Hz	60 Hz	60 Hz	60 Hz
Width	24"	26"	24"	26"
Depth	17"	20"	17"	20"
Height	24"	24"	24"	24"
Shipping Weight	175 lbs.	175 lbs.	215 lbs.	215 lbs.
Typical application	4 Users	4 Users	6 Users	6 Users
Breaker Size*	15 amp	15 amp	20 amp	20 amp
Max sealed vacuum	Approximately 20-25 inches Hg Adjustable			

Barracuda MC-202FSW

NOTES:
Dimensions do not include recirculator
*Each motor.

Forest Packages
Chairs and Stools
Lights and Monitor Mounts
7000 Series
Delivery Systems
Simplified
Factory Options and Parts
General Information
Equipment Warranty
Radiance Operatory
Imagine + Operatory
Operatory Mobile
Sterilization Centers
Orthodontic Cabinetry
Reception/Front Desk Cabinetry
Color Options
Cabinet Warranty
Compressors
Dry Vacuums
Tanks
Wet Vacuums
Utility Room Accessories
Utility Warranty

Barracuda Single

Barracuda CV-101FS
Part Number 64586121

Barracuda CV-101FSW
Part Number 64586121W

Barracuda CV-102FS
Part Number 64586122

Barracuda CV-102FSW
Part Number 64586122W

Barracuda Dual

Barracuda MC-201FS
Part Number 64586110D

Barracuda MC-201FSW
Part Number 6458611DW

Barracuda MC-202FS
Part Number 64586211D

Barracuda MC-202FSW
Part Number 6458621DW

NEW STYLE WITH RELAY BOX
For use with wet pumps with serial numbers starting with “V”

OLD STYLE NO RELAY BOX
For use with wet pumps with serial numbers starting with “S”

Description	Part Number
Water Recirculators	
WR-100 - Water Recirculator for CV-101	64592011
WR-100 - Water Recirculator for CV-102	64592012
WR-100 - Water Recirculator for MC-201 & MC-202 Pumps	64592005
Cleaner for Water Recirculator (40oz. container with 1oz. scoop)	64568129
Water Separator	
AM-200 - Air/Water or Nitrous Oxide Separator	64656200
Maintenance / Replacement Pumps	
MC-201FS 1 HP	64586811R
MC-202FS 2 HP	64586812R
MC-201FS with Water Recirculator	64586813R
MC-202FS with Water Recirculator	64586814R
MC-201 Old Style-208/230 Volt (no relay box)	64586100R
MC-202 Old Style-208/230 Volt (no relay box)	64586200R
Accessories	
Top shelf with a 300 lb. Capacity for Stacking Compressors	64568202

Forest Packages
Chairs and Stools
Lights and Monitor Mounts
7000 Series
Delivery Systems
Simplified
Factory Options and Parts
General Information
Equipment Warranty
Radiance Operatory
Imagine + Operatory
Operatory Mobile
Sterilization Centers
Orthodontic Cabinetry
Reception/Front Desk Cabinetry
Color Options
Cabinet Warranty
Compressors
Dry Vacuums
Tanks
Wet Vacuums
Utility Room Accessories
Utility Warranty

COMPRESSORS

Compressor		Sound Shield/Covers	Filter Kit	Dryer	Fresh Air Intake	Buck Boost
Part #	Users	Part #	Part #	Part #	Part #	Part #
C3-12	3	8658-016(X2)	8801-080	004018SP	8658-009	64637006
C3-12SS	3	Included	8801-079	004018SP	8658-014	64637006
C5-12	5	8658-016(X3)	8801-080	004018SP	8658-010	64637006
C5-12SS	5	Included	8801-079	004018SP	8658-015	64637006
C6-2	6	8543-023	005350SP	004020SP	8658-012	64637006
C8-2	8	8625-022 (x2)	8801-087	004020SP	8658-012	64637006
C8-2SS	8	Included	8801-101	004020SP	8658-019	64637006
C12-2	12	8625-022 (x2)	8801-087	004020SP	8658-012	64637013
C12-2SS	12	Included	8801-101	004020SP	8658-019	64637006
C18-2	18	8625-022 (x3)	8801-087	005413SP	8658-013	64637013
C18-2SS	18	Included	8801-100	004020SP	8658-020	64637006
C3-2*	3	8543-022	005147SP	004018SP	005002	64637006
C4-1*	4	8543-021	005147SP	004018SP	005002	64637013
C4-2*	4	8543-022	005147SP	004018SP	005002	64637006
C4-12*	4	8658-016(X3)	8801-080	004018SP	8658-010	64637006
C4-12SS*	4	Included	8801-079	004018SP	8658-015	64637006
C7-2*	7	8543-023	005148SP	004020SP	005002	64637013
C11-2*	11	8543-024	005149SP	005413SP	005014	64637013
OSP22*	3	8543-022	005147SP	004018SP	005002	64637006
OSP13*	4	8543-021	005147SP	004018SP	005002	64637013
OSP23*	4	8543-022	005147SP	004018SP	005002	64637006
OSP24*	6	8543-023	005350SP	004020SP	005002	64637006
OSP25*	7	8543-023	005148SP	004020SP	005002	64637013
OSP28*	11	8543-024	005149SP	005413SP	005014	64637013
1022*		N/A	004015	004018SP	N/A	N/A
1013D*		N/A	004016	004018SP	N/A	N/A
1023D*		N/A	004016	004018SP	N/A	N/A
1025D*		N/A	004016	004018SP	N/A	N/A
1027D20*		N/A	004016	004019SP	N/A	N/A
1029T*		N/A	004017	004020SP	N/A	N/A
1029T30*		N/A	004017	004020SP	N/A	N/A

*Discontinued

VACUUMS

Vacuum		Service Filter Set	Air Filter	Oil Filter	Oil	Buck Boost
Part #	Users	Part #	Part #	Part #	Part #	Part #
RV4-12	4	003740	003583	310705	7809-001	64637006
RV5-2	5	003750	003700	310705	7809-001	64637006
RV7-2	7	003750	003700	310705	7809-001	64637006
RV10-2	10	003750	003700	310705	7809-001	64637006
RV12-23	12	003750	003700	310705	7809-001	64637006
BADGLF2 prior to BG1307xxx	4	N/A	004691SP	N/A	N/A	64637006
BADGLF2 after BG1307xxx	4	N/A	005301SP	N/A	N/A	64637006
All Wet Vacuums	2-6	64568145	N/A	N/A	N/A	64637006

Models 550, 1400 and 2800 use DELVAC 15W40 Pack of 4 gallons (part # 310703)

4 user vacuum requires 3 qts of oil, some require 4 qts of oil

NOTES:
Please refer to your User Guide or contact Ramvac Technical Support to determine your Ramvac's oil capacity. Remote air intakes come with sound covers, not with sound shield.

Forest Packages
Chairs and Stools
Lights and Monitor Mounts
7000 Series
Delivery Systems
Simplified
Factory Options and Parts
General Information
Equipment Warranty
Radiance Operatory
Imagine + Operatory
Operatory Mobile
Sterilization Centers
Orthodontic Cabinetry
Reception/Front Desk Cabinetry
Color Options
Cabinet Warranty
Compressors
Dry Vacuums
Tanks
Wet Vacuums
Utility Room Accessories
Utility Warranty

Remote Panels

Remote Panel #1
Part Number 8-600-131

Remote Panel #2
Part Number 8-600-132

Remote Panel #3
Part Number 8-600-133

Remote Panel #4
Part Number 8-600-134

Remote Panel #5
Part Number 8-600-135

Master Water Control Valves

Master Water Control Valve
Adjustable between 1/2" and 3/4"

Part Number MWC075

Master Water Control Valve with Regulator
Adjustable between 1/2" and 3/4" with regulator

Part Number MWC075R

Master Water Control Valve 1"
Part Number MWC001

NOTES:
Master Water Control Valves now come standard with 24V Solenoid valve and transformer for easy installation to Ramvac master control panels. 115V versions are available; please call 1-866-DTE-INFO for ordering information and availability.

Description	Part Number
Replacement Cartridges	
AP110 Water Filter for 1/2" and 3/4" Master water controls (2 pack, for older WC series)	64520006
AP801 Water Filter for 1" Master water controls (2 pack, for older WC series)	64520012
Filter Cartridge Kit for new MWC series (2 pack)	8801-040

Description	Part Number
Master Water Control Valve Replacement Kits	
Solenoid Valve Kit, 3/4"	8801-041
Solenoid Valve Kit, 1"	8801-042
Transformer Kit	8801-043
O-Ring Replacement Kit	8801-044

Adjustable Utility Stand

Adjustable Utility Stand, shown at 62, 50 and 40 inches.

Adjustable Utility Stand
36" W x 24" D x 40"-62" H

Part Number 4060

NOTES:
The Ramvac 18 Compressor (C18-2) with Sound Cover does not fit underneath stand. The RV12 with 30 gallon tank does not fit underneath stand 4060.

Forest Packages
Chairs and Stools
Lights and Monitor Mounts
7000 Series
Delivery Systems
Simplified
Factory Options and Parts
General Information
Equipment Warranty
Radiance Operatory
Imagine + Operatory
Operatory Mobile
Sterilization Centers
Orthodontic Cabinetry
Reception/Front Desk Cabinetry
Color Options
Cabinet Warranty
Compressors
Dry Vacuums
Tanks
Wet Vacuums
Utility Room Accessories
Utility Warranty

Amalgam Separator

NXT Hg5 Amalgam Separator

(1-10 users)

Part Number 8707-002

NXT Hg5 MINI Amalgam Separator

(1-4 users)

Part Number 8707-003

NXT Hg5 High Volume Amalgam Separator (1-10 users)

Part Number 8707-004

NXT Amalgam Separator

- Compact design from Solmetex with internal manifold, ideal for hard to fit areas
- Integrates seamlessly with all Ramvac wet and dry vacuums
- Environmentally friendly packaging
- Simple mail-back recycling program
- Meets all "EPA Dental Rule" requirements
  - Clear system, easy to inspect
  - Two-minute container change out
  - No tools necessary
- ISO 11143 certified by NSF International

NOTES:
Replacement canisters are supplied by Solmetex, to order, please contact them directly. Used collection containers must be delivered to an EPA Certified Recycler. Ramvac is not a recycler. Do NOT send used collection containers to Ramvac.

Description	Part Number	Retail Price
Additional Options		
Bracket Mount to Ramvac Tank	8562-001	$268

Vacuum Line Cleaner

SlugBuster™

SlugBuster Powder Starter Pack

Includes a 2 gallon mixing jug, two 40 oz. containers of SlugBuster powder with scoop

Part Number 900143

SlugBuster Liquid Starter Pack

Includes 2 gallon mixing jug, 1 gallon of SlugBuster concentrate and hand pump dispenser

Part Number 900243

SlugBuster Powder 6 Pack

Includes six 40 oz. containers of SlugBuster powder with scoop

Part Number 900146

SlugBuster Liquid 4 Pack Case

Includes 4 single gallons of SlugBuster concentrate and 4 hand pump dispensers

Part Number 900246

SlugBuster Liquid Single Gallon

Includes a single gallon of SlugBuster concentrate and hand pump dispenser

Part Number 900241

SlugBuster™

Cleans and deodorizes vacuum hoses, drains, piping, and separators.

VACHECK® / FLOWCHECK®

Check the vacuum performance for your treatment room.

VACHECK

Part Number 800500

VACHECK for Simple Pass-Fail" indication.(Patent 5,779,472)

FLOWCHECK

Part Number 800501

FLOWCHECK for measurement of flow in SCFM. (Patent 6,925,886 B2)

NOTES:
Please refer to your User Guide or contact Ramvac Technical Support to determine your Ramvac's oil capacity.

Forest Packages
Chairs and Stools
Lights and Monitor Mounts
7000 Series
Delivery Systems
Simplified
Factory Options and Parts
General Information
Equipment Warranty
Radiance Operatory
Imagine + Operatory
Operatory Mobile
Sterilization Centers
Orthodontic Cabinetry
Reception/Front Desk Cabinetry
Color Options
Cabinet Warranty
Compressors
Dry Vacuums
Tanks
Wet Vacuums
Utility Room Accessories
Utility Warranty

Part No	Description
Ramvac Compressors	
C3-12	Ramvac 3 Compressor (Osprey 22)
C3-12SS	Ramvac 3 Compressor w/Sound Shield
C5-12	Ramvac 5 Compressor (Osprey 23)
C5-12SS	Ramvac 5 Compressor w/Sound Shield
C8-2	Ramvac 8 Compressor
C8-2SS	Ramvac 8 Compressor w/Sound Shield
C12-2	Ramvac 12 Compressor (Osprey 28)
C12-2SS	Ramvac 12 Compressor w/Sound Shield
C18-2	Ramvac 18 Compressor
C18-2SS	Ramvac 18 Compressor w/Sound Shield
8543-023	Sound Cover for C6-2, C8-2, C12-2 (with air intake)
8543-024	Sound Cover for C18-2 (with air intake)
Ramvac Vacuums	
Vacuum System (with 15 gallon tank and platform)	
RV4-12T	Ramvac 4 Dry Vacuum System (Bulldog QT 2) 4 User/115V & 230V Single Phase
RV5-2T	Ramvac 5 Dry Vacuum System (Bison 3) 5 User 230V Single Phase
RV7-2T	Ramvac 7 Dry Vacuum System (Bison 5) 7 User 230V Single Phase
RV7-23T	Ramvac 7 Dry Vacuum System (Bison 5) 7 User 230V Three Phase
RV10-2T	Ramvac 10 Dry Vacuum System (Bison 7) 10 User 230V Single Phase
RV10-23T	Ramvac 10 Dry Vacuum System (Bison 7) 10 User 230V Three Phase
Vacuum System (with 30 gallon tank and platform)	
RV5-2T30	Ramvac 5 Dry Vacuum System (Bison 3) 5 User 230V Single Phase
RV7-2T30	Ramvac 7 Dry Vacuum System (Bison 5) 7 User 230V Single Phase
RV10-2T30	Ramvac 10 Dry Vacuum System (Bison 7) 10 User 230V Single Phase
RV12-23T	Ramvac 12 Dry Vacuum System (Bison 9) 12 User 230V Three Phase
RV12-43T	Ramvac 12 Dry Vacuum System (Bison 9) 12 User 460V Three Phase
Vacuum Only	
RV4-12	Ramvac 4 Dry Vacuum (Bulldog QT 2) 4 User/115V & 230V Single Phase
RV5-2	Ramvac 5 Dry Vacuum (Bison 3) 5 User 230V Single Phase
RV7-2	Ramvac 7 Dry Vacuum (Bison 5) 7 User 230V Single Phase
RV7-23	Ramvac 7 Dry Vacuum (Bison 5) 7 User 230V Three Phase
RV10-2	Ramvac 10 Dry Vacuum (Bison 7) 10 User 230V Single Phase
RV10-23	Ramvac 10 Dry Vacuum (Bison 7) 10 User 230V Three Phase
RV12-23	Ramvac 12 Dry Vacuum (Bison 9) 12 User 230V Three Phase
RV12-43	Ramvac 12 Dry Vacuum (Bison 9) 12 User 460V Three Phase

Part No	Description
Dry Vacuums	
BADGLF2	Badger LF Dry Vacuum
Tanks	
A575015	15-Gallon Tank
A575030	30-Gallon Tank
A575080	Ramvac Infini Tank
590053	50 Gallon Cylindrical Tank
Additional Tank Options	
575056	Vacuum Platform
575215	Suspension Set
575212	12” Height Extender
590504	Auxiliary Vacuum Adapter
Wet Vacuums	
64586121	Barracuda Single, CV-101FS
64586121W	Barracuda Single, CV-101FSW
64586122	Barracuda Single, CV-102FS
64586122W	Barracuda Single, CV-102FSW
64586110D	Barracuda Dual, MC-201FS
6458611DW	Barracuda Dual, MC-201FSW
64586211D	Barracuda Dual, MC-202FS
6458621DW	Barracuda Dual, MC-202FSW
64592011	WR-100, Water Recirculator for CV-101
64592012	WR-100, Water Recirculator for CV-102
64592005	WR-100, Water Recirculator for MC-201 & MC-202 Pumps
64568129	Cleaner for Water Recirculator (40 oz. container)
64656200	AM-200, Air/Water or Nitrous Oxide Separator
Maintenance / Replacement Pumps	
64586811R	MC-201FS 1 HP
64586812R	MC-202FS 2 HP
64586813R	MC-201FS with Water Recirculator
64586814R	MC-202FS with Water Recirculator
64586100R	MC-201 Old Style - 208/230 Volt (no relay box)
64586200R	MC-202 Old Style - 208/230 Volt (no relay box)
64568202	Top shelf with a 300 lb. capacity for stacking compressors

Forest Packages
Chairs and Stools
Lights and Monitor Mounts
7000 Series
Delivery Systems
Simplified
Factory Options and Parts
General Information
Equipment Warranty
Radiance Operatory
Imagine + Operatory
Operatory Mobile
Sterilization Centers
Orthodontic Cabinetry
Reception/Front Desk Cabinetry
Color Options
Cabinet Warranty
Compressors
Dry Vacuums
Tanks
Wet Vacuums
Utility Room Accessories
Utility Warranty

Part No	Description
Remote Panels	
8-600-131	Remote Panel #1
8-600-132	Remote Panel #2
8-600-133	Remote Panel #3
8-600-134	Remote Panel #4
8-600-135	Remote Panel #5
Master Water Control Valves	
MWC075	Adjustable between 1/2” and 3/4”
MWC075R	Adjustable between 1/2” and 3/4” with regulator
MWC001	Master Water Control Valve 1”
Replacement Cartridges	
64520006	AP110 Water Filter for 1/2” and 3/4” Master water controls (2 pack, for older WC series)
64520012	AP801 Water Filter for 1” Master water controls (2 pack, for older WC series)
8801-040	Filter Cartridge Kit for new MWC series (2 pack)
Replacement Kits	
8801-041	Solenoid Valve Kit, 3/4”
8801-042	Solenoid Valve Kit, 1”
8801-043	Transformer Kit
8801-044	O-Ring Replacement Kit
Buck/Boost Transformers	
Facility voltage range w/o transformer 115VAC | 230VAC up to 40 AMP Circuit	
64637013	94-98VAC | 206-212VAC
Facility voltage range w/o transformer 115VAC | 230VAC up to 20 AMP Circuit	
64637006	94-98VAC | 206-212VAC
590504	Auxillary Vacuum Adapter
Adjustable Utility Stand	
4060	Adjustable Utility Stand 36”W x 24”D x 40”-62"H
VACHECK / FLOWCHECK	
800500	VACHECK
800501	FLOWCHECK
NXT Amalgam Separator - Hg5 Models	
8707-002	NXT Hg5 Amalgam Separator (1-10 users)
8707-003	NXT Hg5 MINI Amalgam Separator (1-4 users)
8707-004	NXT Hg5 High Volume Amalgam Separator (11-20 users)
8562-001	Bracket Mount to Ramvac Otter Tank

Part No	Description
SlugBuster	
900143	Powder Starter Pack - 2 gallon mixing jug, two 40oz. containers of SlugBuster powder with scoop
900146	Powder 6 Pack - six 40oz. containers of SlugBuster powder with scoop
900241	Liquid Single Gallon - single gallon of SlugBuster concentrate and hand pump dispenser
900243	Liquid Starter Pack - 2 gallon mixing jug, 1 gallon of SlugBuster concentrate, & hand pump dispenser
900246	Liquid 4 Pack Case - 4 single gallons of SlugBuster concentrate, & 4 hand pump dispensers
Compressor Maintenance	
8801-080	Filter Maintenance Kit for Dual Voltage Compressor, C3-12 w/o Sound Shield
8801-079	Filter Maintenance Kit for Dual Voltage Compressor, C3-12SS, C4-12SS w/Sound Shield
8801-100	Filter Maintenance Kit for Compressor C8-2SS, C12-2SS
8801-101	Filter Maintenance Kit for Compressor C18-2SS
005147SP	Filter Maintenance Kit for 3-4 user
005350SP	Filter Maintenance Kit for 6 user
005148SP	Filter Maintenance Kit for 7 user
8801-087	Filter Maintenance Kit for C6, C8, C12, C18
8658-009	Fresh Air Intake Kit, Ramvac Dual Votage C3-12
8658-010	Fresh Air Intake Kit, Ramvac Dual Votage C4-12
8658-012	Fresh Air Intake Kit for C6, C8, C12
8658-013	Fresh Air Intake Kit for C18
8658-019	Fresh Air Intake Kit for C8-2SS and C12-2SS
8658-020	Fresh Air Intake Kit for C18-2SS
005002	Fresh Air Intake Kit for 3-7 user
005014	Fresh Air Intake Kit for 11 user
004018SP	Service Part, Dryer HR2 for 3 & 4 user
004019SP	Service Part, Dryer HR3 for 7 user
004020SP	Service Part, Dryer HR4 for 6 & 7 user
005413SP	Service Part, Dryer HR4L for 11 user
004015	Maintenance Kit for 1022
004016	Maintenance Kit for 1013D, 1023D, 1025D & 1027D20
004017	Maintenance Kit for 1029T and 1029T30
Vacuum Maintenance	
003583	Air Filter Set for 4 user
310705	Oil Filter Element
003740	Service Filter Set for 4 user
003700	Air Filter Set for 5-12 user
003750	User Service Filter Set for 5-12 user
7809-001	Ramvac Synthetic Oil, 6 x 1qt. bottles
710720	“Standard” Air Filter Set
310703	Pump Oil, DELVAC 15W40 pack of 4 gallon for models 550, 1400 and 2800
004691SP	25 Micron Filter Element (for units prior to serial number: BG1307xxx)
005301SP	Badger Service Filter Set (for units later than serial number: BG1307xxx) (requires both filters)

Forest Packages
Chairs and Stools
Lights and Monitor Mounts
7000 Series
Delivery Systems
Simplified
Factory Options and Parts
General Information
Equipment Warranty
Radiance Operatory
Imagine + Operatory
Operatory Mobile
Sterilization Centers
Orthodontic Cabinetry
Reception/Front Desk Cabinetry
Color Options
Cabinet Warranty
Compressors
Dry Vacuums
Tanks
Wet Vacuums
Utility Room Accessories
Utility Warranty

Ramvac Product Support Services

DENTALEZ and its employees are proud of the products we provide to the dental community. We stand behind these products with a warranty against defects in material and workmanship as provided below and have our own in-house repair facility to service our products. In the event that you experience difficulty with the application or operation of any of our products, please contact our customer service department at our expense at (866)DTE-INFO.

If we cannot resolve the issue by telephone, we will arrange for a representative to contact you or suggest that the product be returned to our factory for inspection.

If product return or repair is required, we will provide you with a Return Authorization number and shipping instructions to return the product to the proper facility. If the product is under warranty, we will ask you to provide proof of purchase such as a copy of your invoice. Please be sure to include the Return Authorization number on the package you are returning. Products returned without a return authorization number cannot be repaired.

Freight costs for product returns are the responsibility of the customer. Products under warranty will be repaired or replaced, at our sole discretion, and returned at our expense. Products outside the warranty limits will be repaired and returned with costs invoiced to the customer. We are not responsible for shipping damages. We will, however, help you file a claim with the freight carrier. Written repair estimates are available.

DENTALEZ warrants all equipment and parts to be free of defects in material and workmanship, under normal usage, under the following terms:

Ramvac	**Limited Warranty Period***
Ramvac Compressors	6 Years from date of installation
Ramvac Dry Vacuums	6 years from date of installation / 10 years for pump only
Badger LF Vacuum	2 years from date of installation / 5 years for pump only
Wet Vacuum Systems	5 Years from date of installation
Master Water Control	2 Years from date of installation
NXT Hg5 Amalgam Separator	Warranty from Solmetex, 2 years

Please note the following additional terms of our warranty and return policy:

- This warranty covers manufacturing defects only and does not cover defects resulting from abuse, accidents, misuse, improper handling, cleaning, care or maintenance. Damage resulting from the use of chemicals, cleaners, disinfectants or sterilization is not covered under this warranty nor is normal wear and tear. Failure to follow or observe our operating/use, maintenance and/or installation instructions voids this warranty as does the use of non-authorized parts and repairs made by an unauthorized repair facility.
- Liability is limited to repair or replacement of the defective part(s) or products at our sole discretion. All other liabilities, in particular liability for damages, including, without limitation, special, exemplary, consequential or incidental damages are excluded.
- THIS WARRANTY IS IN LIEU OF ALL OTHER WARRANTIES, EXPRESSED OR IMPLIED, INCLUDING ANY IMPLIED WARRANTIES OF MERCHANTABILITY OR FITNESS FOR A PARTICULAR PURPOSE. NO EMPLOYEE, REPRESENTATIVE OR DEALER IS AUTHORIZED TO CHANGE THIS WARRANTY IN ANY WAY OR TO GRANT ANY OTHER WARRANTY.

Warranty Repairs:
Parts repaired or replaced on a product that is in warranty will be warranted for the duration of that product's original warranty.

Product Returns:
Opened products or product returns more than a year old cannot be returned for credit. There will be a 15% ($25.00 minimum) restocking charge on all items authorized for return.

NOTES:
*Provided conditions defined in instruction manual are met. DENTALEZ is a registered trademark of DENTALEZ, Inc. Ramvac, Bison, Bulldog, FLOWCHECK, InfiniTank, Ramclean and VACHECK are registered trademarks and Badger, Barracuda, Osprey, and SlugBuster are trademarks of Ramvac Dental Products, Inc.
PowerScrub is a trademark of Solmetex, LLC.

Forest Packages
Chairs and Stools
Lights and Monitor Mounts
7000 Series
Delivery Systems
Simplified
Factory Options and Parts
General Information
Equipment Warranty
Radiance Operatory
Imagine + Operatory
Operatory Mobile
Sterilization Centers
Orthodontic Cabinetry
Reception/Front Desk Cabinetry
Color Options
Cabinet Warranty
Compressors
Dry Vacuums
Tanks
Wet Vacuums
Utility Room Accessories
Utility Warranty

Notes

Forest Packages
Chairs and Stools
Lights and Monitor Mounts
7000 Series
Delivery Systems
Simplified
Factory Options and Parts
General Information
Equipment Warranty
Radiance Operatory
Imagine + Operatory
Operatory Mobile
Sterilization Centers
Orthodontic Cabinetry
Reception/Front Desk Cabinetry
Color Options
Cabinet Warranty
Compressors
Dry Vacuums
Tanks
Wet Vacuums
Utility Room Accessories
Utility Warranty

DENTALEZ CORPORATE
301 Lindenwood Drive, Ste.100
Malvern, PA 19355

T: 800.293.5206
F: 610.725.9894

DENTALEZ.COM

Visit DSXsales.com to find your local representative. For DENTALEZ, Forest, Ramvac, and Imagine + orders and/or questions please call our Customer Experience Representatives at 866.DTE.INFO.

Regarding Radiance cabinet customer service, please contact ILS at ilsdental.com/contact.

2024 DENTALEZ, Inc. All rights reserved. DENTALEZ, Star and Dentoform are registered trademarks and Imagine + and Nevin are trademarks of DENTALEZ INC. Ramvac is a registered trademark of Ramvac Dental Products Inc.

1/1/2024

Forest Packages
Chairs and Stools
Lights and Monitor Mounts
7000 Series
Delivery Systems
Simplified
Factory Options and Parts
General Information
Equipment Warranty
Radiance Operatory
Imagine + Operatory
Operatory Mobile
Sterilization Centers
Orthodontic Cabinetry
Reception/Front Desk Cabinetry
Color Options
Cabinet Warranty
Compressors
Dry Vacuums
Tanks
Wet Vacuums
Utility Room Accessories
Utility Warranty