FLOOR BOX UTILITIES AND FOOT CONTROL WITH POWER SUPPLY FOR ANCILLARIES

SCHEMATIC

Forest DENTALEZ

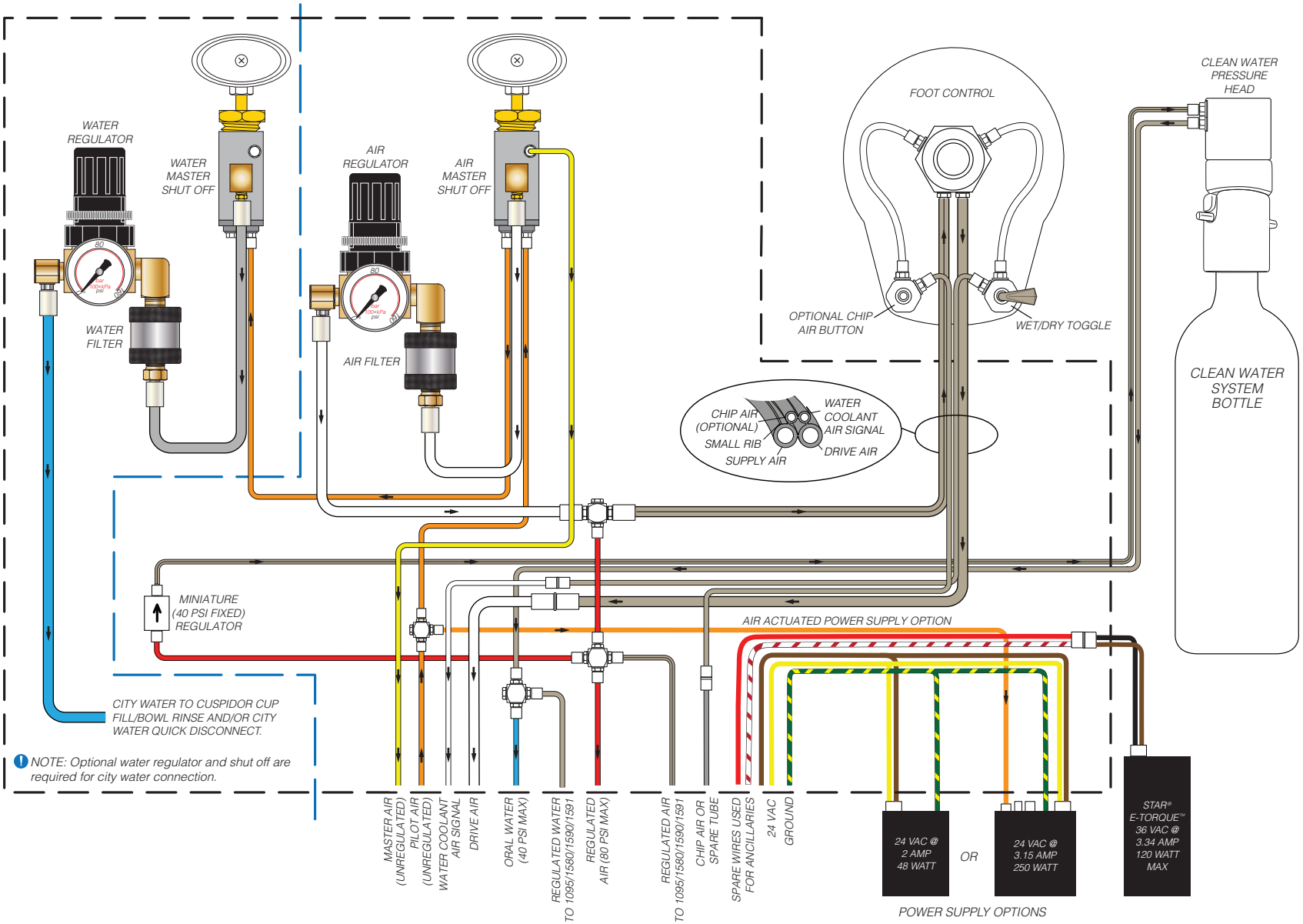

DTE OREGON, INC. DENTALEZ.COM

6200 NE Cherry Drive, Hillsboro, OR 97124 USA (TF) 800 . 423 . 3555 (T) 503 . 640 . 3012 (F) 503 . 693 . 9715