RAMVAC®

VACUUMS

MAKES YOUR PRACTICE PERFECT®

HOW TO SIZE THE BEST RAMVAC® DENTAL VACUUM

The **Precise Equipment Selection Method**, pick a custom system.

- Works for any application.
- Select the "Vacuum Unit" according to HVE Equivalents.
- See "RAMVAC Vacuum Units" table below.
- Select tanks according to your specific facility requirements, page 100.
- Select accessories according to your specific facility requirements, page 104.

RAMVAC Vacuum Units Only		Performance Rating at RAMVAC Performance Standard			Approximate Equivalent Performance	
Product No.	**Model**	**HVE Equivalents**		**Saliva Ejectors**	**Water Ring Pump**	**Turbine**
BADG1.2.60.1	Badger™	3	or	15	2 hp	2 hp
809E.0800.1	Bulldog® QT 1	2	or	10	2 hp	2 hp
809E.1050.1	Bulldog QT 2	3	or	15	2 x 1.5 hp	3 hp
818E.0800	Bison® 3	4	or	20	2 x 2 hp	4 hp
818E.1050	Bison 5	6	or	30	3 X 2 hp	5 hp
826E.0800	Bison 7	8	or	40	4 x 2 hp	7.5 hp
826E.1050	Bison 9	10	or	50	5 x 2 hp	10 hp

HVE = High Volume Evacuator
1 HVE = 1 user
1 Isolite System = 1 user
1 HVE = 5 saliva ejectors
1 HVE = 4 nitrous oxide scavengers
For optimum performance, vacuum pumps should be sized to provide a minimum of 7.25 scfm at each HVE.
For additional sizing information, call RAMVAC technical service.

OR

The **Quick & Easy Method**, pick a RAMVAC "Combo".

- Works for typical applications (80% of all applications)
- Match number of doctors to "Combo" number

Number of Doctors	Combos	More Info. On
1	Bulldog Combo 1	Page 99
2	Bulldog Combo 2	
2	Badger	Page 98
3	Bison Combo 3	Page 99
5	Bison Combo 5	Page 99
7	Bison Combo 7	Page 99
9	Bison Combo 9	

RAMVAC DRY VACUUMS

Badger

Badger Features and Benefits

- LubeFree and waterless
- Small footprint
- Open frame design for ease of maintenance
- Stackable units for easy expansion
- Auto shut down ensures longevity of rotary vanes
- 5 Year Warranty on pump

Includes: LubeFree rotary vane vacuum pump, 5 gallon integrated separation tank, and E1 control. Meets the following requirements:

- UL 60601-1
- CSA C22.2 No. 601.1
- NFPA 99c Level 3 Vacuum System

Bulldog & Bison Features and Benefits

Lowest Cost Vacuum

- Longest service life of any dental vacuum unit available
- 100% water free - completely eliminates vacuum related water and sewage fees
- ½ the electrical cost of water ring or turbine systems
- Expandable models for protection against "outgrowing" your system
- NEW S2 controls utilize a pressure transducer so the vacuum levels are digitally displayed on a 2 line, 16 character LCD. Also displays maintenance reminders and alarms.

Bulldog QT

Performance

- Will meet or exceed the performance of any other vacuum system available today (when sized and selected according to RAMVAC recommendations)

Durability

- 10 Year "No-Fail-No-Wear-Out" Pump Warranty
- Exclusive low-speed, heavy-duty, oil-lubricated rotary-vane pumps
- Proven performance for over 40 years
- Patented pump protection technology

Bison

RAMVAC Badger Specifications & Ordering Information

			Power Requirements			Pump Specifications				Dimensions			
Product	**Users**	**Retail Price**	**Voltage**	**Full Load**	**Frequency**	**Hp**	**Maximum Vacuum**	**Preset Vacuum Level**	**Tank**	**W**	**D**	**H**	**Weight**
Badger BADG1.2.60.1	1-3	$6,606.53	208-230 VAC, Single Phase	6.7 A	60 Hz	1.5 HP	15 in Hg	7 in Hg	**Capacity:** 5 gallons **Material:** Polyethylene	18.7"	25.1"	22.7"	**Unit:** 152 lbs **Shipping:** 210 lb

Note: E1 control not compatable with OWL. See sizing details on pg. 96.

RAMVAC Bulldog Power Unit Only Specifications & Ordering Information

			Power Requirements			Pump Specifications				Dimensions*		
Product	**Product name**	**Retail Price**	**Output Power**	**Input Power**	**Max Amps**	**Size**	**RPM**	**Drive Belts**	**Oil Drippers**	**W**	**D**	**H**
809E.0800.1	Bulldog QT 1	$9,359.43	1 hp (0.7 kW)	230v 1 ph 60 Hz	6.7@ 230v	0.9L	800	1	2	21" (533 mm)	17" (406 mm)	25" (635 mm)
809E.1050.1	Bulldog QT 2	9,748.17					1050					

* Vacuum unit dimensions do not include tank. Height dimensions do not include S-type filters.

RAMVAC Bison Power Unit Only Specifications & Ordering Information

			Power Requirements			Pump Specifications				Dimensions*		
Product	**Product name**	**Retail Price**	**Output Power**	**Input Power**	**Max Amps**	**Size**	**RPM**	**Drive Belts**	**Oil Drippers**	**W**	**D**	**H**
818E.0800.1	Bison 3	$13,284.68	3 hp (2.2 kW)	208/230v 1 ph 60 Hz	16.0 @ 208/230v	1.8L	800	2	2	26" (660 mm)	19" (483 mm)	30" (762 mm)
818E.1050.1	Bison 5	14,441.69					1050					
826E.0800.1	Bison 7	16,932.70				2.6L	800		3		22" (560 mm)	
818E.0800.3	Bison 3	13,284.68	3 hp (2.2 kW)	208/230v 3 ph 60 Hz	8.0 @ 208/230v	1.8L	800		2		19" (483 mm)	
818E.1050.3	Bison 5	14,441.69					1050					
826E.0800.3	Bison 7	16,932.70				2.6L	800		3		22" (560 mm)	
826E.1050.3	Bison 9	18,246.23	5 hp (3.7 kW)		13.8 @ 208/230v		1050		3			

* Vacuum unit dimensions do not include tank. Height dimensions do not include S-type filters.

BULLDOG® QT AND BISON® COMBO PACKAGES

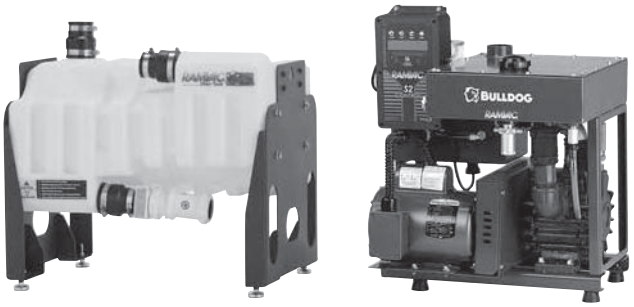

Bulldog beside
15 gallon Otter Tank

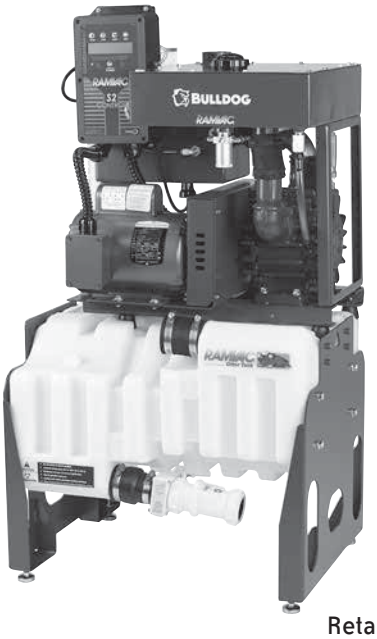

Bulldog stacked on
15 gallon Otter Tank

Ordering Information – Combo Packages

		Retail
C809001	Bulldog QT Combo 1: 1 Doctor + Staff using 6 rooms or fewer: 230v 1 ph 60 Hz standard; includes Bulldog QT 1 and a 15 gallon Otter Tank	$10,456.08
C809002	Bulldog QT Combo 2: 2 Doctors + Staff using 6 rooms or fewer: 230v 1 ph 60 Hz standard; includes Bulldog QT 2 and a 15 gallon Otter Tank	10,844.82
C818003	Bison Combo 3: 3 Doctors + Staff using 12 rooms or fewer: 208/230v 1 ph 60 Hz standard; includes Bison 3 and a 30 gallon Otter Tank	14,558.31
C818005	Bison Combo 5: 5 Doctors + Staff using 16 rooms or fewer: 208/230v 1 ph 60 Hz standard; includes a Bison 5 and a 50 gallon cylindrical Tank	16,026.32
C826007	Bison Combo 7: 7 Doctors + Staff using 20 rooms or fewer: 208/230v 1 or 3 ph 60 Hz standard – Includes a Bison 7, an InfiniTank and S-Type Exhaust Filter	19,841.09
C826009	Bison Combo 9: 9 Doctors + Staff using 20 rooms or fewer: 208/230v 3 ph 60 Hz standard – Includes a Bison 9, an InfiniTank and S-Type Exhaust Filter	21,154.62

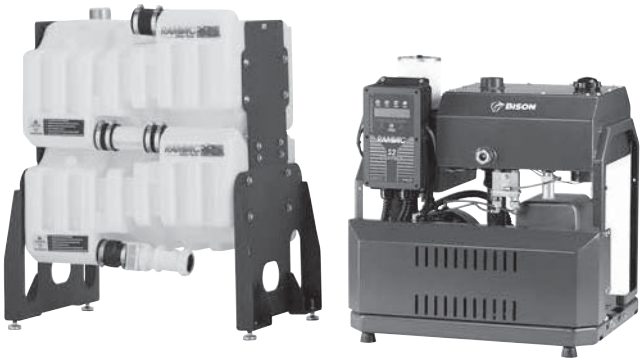

Bison beside
30 gallon Otter Tank

Bison stacked over
30 gallon Otter
Tank using
optional platform

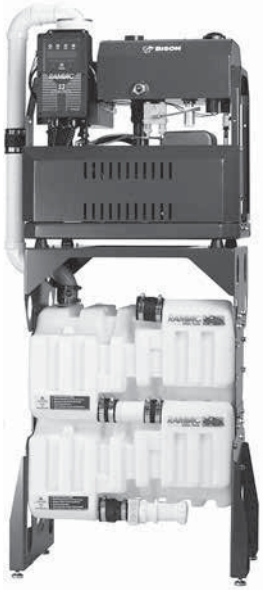

HOW TO SELECT A TANK

Tanks store liquids and debris removed from the treatment room.
Tanks must be sized to correctly match the volume of liquids and debris you remove during a vacuum operating cycle.

30 Gallon Otter Tank

15 Gallon Otter Tank

Start your tank selection using the table below.

In General:

- If heavy surgical use or copious line rinsing is anticipated, use a larger size tank.
- For extra capacity, use multiple tanks or an InfiniTank.
- For vacuum drain sinks, please call.
- Custom tank sizes and configurations are available.

Hints:

- When in doubt, use a larger tank.

Tank Sized according to number of Treatment Rooms*:

Rooms*	Typical Tank	Tank Prod.Cat.No.
1-6	15 Gallon Otter Tank	575015
7-12	30 Gallon Otter Tank	575030
13-20	50 Gallon Cylindrical Tank	590053
1-20	InfiniTank	575080
More than 20	Please Contact RAMVAC Tech Support	

* This assumes 1 chair per room. For bays, let “rooms”= chairs.

OTTER® TANKS

15 Gallon Otter Tank

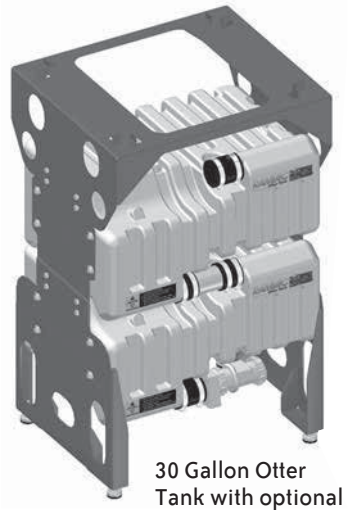

30 Gallon Otter Tank with optional Bison platform (necessary to stack Bison on Otter Tank)

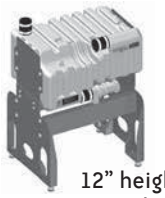

12" height extender

Suspension set (for 15 gallon tank only)

Otter Tank Dimensions:

	Width	Depth	Height
15 Gallon	25"	19"	24"
30 Gallon	29"	21"	36"

Features and Benefits

- Proven strength and toughness
- Non-corrodible advanced polymer
- Large, clog resistant drain valve
- Fits neatly next to flat walls and into corners
- Easy-access to inlet and pump connections
- Molded "paw" prints support Bulldog vacuum unit directly on tank
- Allows multiple "tank + vacuum unit" configurations
- Easily configured for suspended installation
- Adjustable anti-slip rubber feet

Ordering Information

		Retail
575015	15-Gallon Otter Tank	$1,096.66
575030	30-Gallon Otter Tank	1,273.64
575056	Bison platform	388.00
575215	Suspension set	72.00
575212	12" Height extender	436.00
590504	Auxiliary Vacuum Adapter	91.00

InfiniTank™

InfiniTank Dimensions:

Width	Depth	Height
29"	21"	36"

Features and Benefits

- Simple maintenance free design
- Drains without vacuum interruption
- Significantly reduces the size and number of separating tanks
- Completely automated to provide worry free operation
- Fits neatly next to walls and into corners

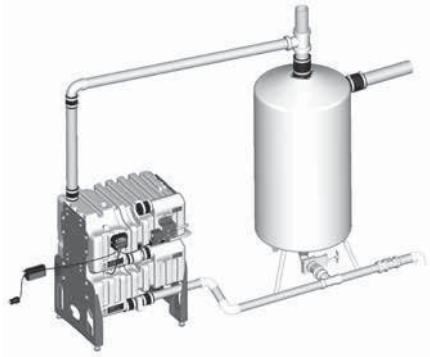

InfiniTank- High Flow

Ordering Information

		Retail
575080	InfiniTank	$2,908.39
575085	InfiniTank 50 Hz	2,921.69
575580	InfiniTank- High Flow	4,494.04
575585	InfiniTank- High Flow 50 Hz	4,506.32

50 GALLON CYLINDRICAL TANKS

50 Gallon Tank
Product no. 590053
Includes 2" & 3" inlet & vacuum fittings, 3 each galvanized pipe legs, and drain valve

Dimensions:

Tank OD	22" (560 mm)
Height	62" (1580 mm)

50 Gallon Horizontal Tank
Product no. 590050H
Includes 2" inlet & vacuum fittings, Sling Kit, and drain valve

Dimensions:

Width	Depth	Height
53"	22"	24"
(610 mm)	(560 mm)	(1350 mm)

Features and Benefits

- Easy to Install
- Reliable
- Non-corrodable fiberglass construction
- Clean-drain tapered bottom
- Clog resistant drain valve
- Versatile
- Omni-directional drain & pump connections

Ordering Information

		Retail
590053	50 Gallon Tank	$1,584.63
590050H	50 Gallon Horizontal Tank including Sling Kit	1,944.72

Custom Tanks

Have a special situation or need a custom solution for a challenging application? Give us a call and let RAMVAC help solve your tough vacuum problem. RAMVAC has years of experience and the ability to custom fabricate tanks and tank systems to help you out of a jam.

- Self draining tank systems
- Custom sizes
- Custom configurations
- Custom mounting
- Multiple tanks for same location
- Multiple tanks for separate locations

Hg5 AMALGAM SEPERATOR

Hg5 with cartridge attached

Hg5 mini

Hg5 HV

Features and Benefits

- Compact Size & 1-½" fittings for increased installation options and easier and quicker installations
- 3-Step separation
- 2-Pin connection
- Transparent
- Exclusive resin
- Compact size
- Recycling options
- Easy cartridge replacement
- Identifies replacement time
- Captures dissolved mercury

Hg5 Amalgam Separator

Hg5 Amalgam Separators intercept microscopic particles and even capture "dissolved" mercury to keep sewer discharge more than 99% free from heavy metals. Our Hg5 separators meet ISO 11143 amalgam separator standards, are approved by many sanitary authorities, and endorsed by many dental associations.

VACHECK®/FLOWCHECK®

Check your treatment room vacuum performance with VACHECK® and FLOWCHECK® to ensure the system will support a known standard of safe, efficient operation of high volume evacuators and other vacuum devices such as nitrous oxide scavengers.

Features and Benefits

VACHECK

FLOWCHECK

Easy to Use

- Fits any 1/2" HVE valve
- Fixed calibration, no adjustments (VACHECK)
- Digital readout guage (FLOWCHECK)

Evaluates Open Suction

- Use in flowing HVE valve
- Flow tests vacuum station
- Detects clogged lines

Accurate

- Responds to small changes in flow or vacuum strength
- High repeatability
- Does not affect flow being measured (FLOWCHECK)
- Altitude compensation (FLOWCHECK)

VACHECK for Simple "Pass-Fail" indication

Patent 5,779,472

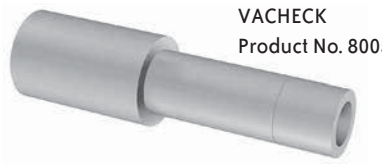

VACHECK
Product No. 800500

FLOWCHECK for measurement of flow in SCFM

Patent 6,925,886 B2

FLOWCHECK
Product No. 800501

Ordering Information

		Retail
590500	Hg5 Amalgam Seperator	$1,012.00
590510	Hg5 HV	2,917.00
590520	Hg5 Mini	850.00
800500	VACHECK	38.00
800501	FLOWCHECK	650.00

Let the SlugBuster™ loose in your vacuum lines today!

Features and Benefits

- Non-chlorinated
- Cleans and deodorizes vacuum hoses, drains, piping, and separators
- Dissolves organic debris
- Absolutely non-foaming
- Fast acting
- Quick rinsing, minimizing drain line residue
- Pleasant, light fragrance
- 8.5 pH level makes SlugBuster compatible with all amalgam separators
- Biodegradable
- Available in powder and liquid forms

Ordering Information

		Retail
900143	Powder Starter Pack includes a 2-gallon mixing jug, 2 boxes of SlugBuster (40 packets per box)	$108.44
900146	Powder 6 Pack includes 6 boxes of SlugBuster (will make 480 gallons of solution)	210.74
900241	Liquid Single Gallon includes a single gallon of SlugBuster concentrate and hand pump dispenser	60.36
900243	Liquid Starter Pack includes 2-gallon mixing jug, 1 gallon of SlugBuster concentrate and hand pump dispenser	108.44
900246	Liquid 4 Pack Case includes 4 single gallons of SlugBuster concentrate and 4 hand pump dispensers	325.31

RAMVAC Maintenance Supplies

Badger Maintenance

004691SP	25 Micron Filter element	$25.00
004606SP	NEW pump exchange kit	1380.00

Bulldog Maintenance

003583	Bulldog 5MP Air Filter Set includes Main Air Filter and Vacuum Controller Filter	$114.00
380706	Pump Oil, Mobil 1, 6 x 1 qt. bottles	114.00
310705	Oil Filter element	40.00
003740	Bulldog Service Filter Set, includes main air, vac control and oil filter elements	153.00

Bison Maintenance

003700	Bison Air Filter Set, includes Main Air Filter and Vacuum Controller Filter	$153.00
380706	Pump Oil, Mobil 1, 6 x 1 qt. bottles	114.00
310705	Oil Filter element	40.00
003750	Bison Service Filter Set includes main air, vac control and oil filter elements	191.00

Maintenance for Standard 550, 1400 and 2800

710720	"Standard" Air Filter Set, includes Main Air Filter & Vacuum Controller Filter	$51.00
310703	Pump Oil, DELVAC 15W40 Pack of 4 gal	112.00
310705	Oil Filter element	40.00

* Please refer to your User Guide or contact RAMVAC Technical Support to determine your RAMVAC's oil capacity.

CustomAir® WATER RING PUMPS

Is a water ring pump right for you? It may be if you:

-Have limited space
-Use surgical suction tips
-Use vacuum sinks
-Profusely rinse vacuum lines
-Have low or no water and sewer costs
-Want a time proven vacuum source
-Have overhead piping
-Have restricted piping

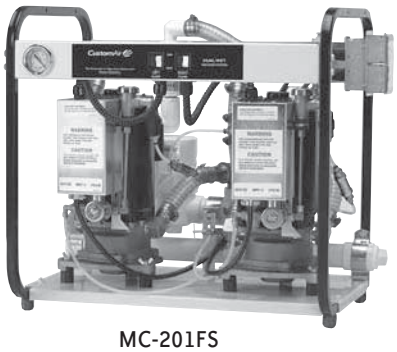

MC-201FS

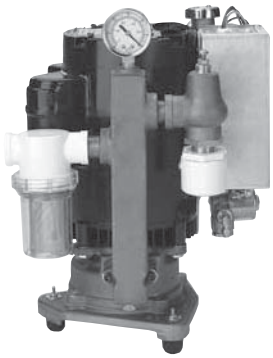

CV-101FS

Features and Benefits

- Quiet and compact
- Long life, chemical resistant brass impeller and housing
- Sealed bearings in motor
- Frame for easier access to motors for maintenance and transport (dual pump)
- Experience counts: proven performance since 1957!

UPC ®

C UL® US LISTED

DENTAL EQUIPMENT 497H RISK CLASS I

Kits for remote operation are located on Page 108.

REPLACEMENT PUMPS

Replacement pumps are for out-of-warranty Dual Vacuum Systems ONLY.

NEW STYLE WITH RELAY BOX

For use with wet pumps with serial numbers starting with "V"

OLD STYLE NO RELAY BOX

For use with wet pumps with serial numbers starting with "S"

Features and Benefits

- Immediate delivery
- Low pricing
- Original factory specification since 1957!

Ordering Information & Specifications

	MC-201FS	MC-201FSW	MC-202FS	MC-202FSW
Part Number	64586110D	6458611DW	64586211D	6458621DW
Retail Price	$5,299.14	5,712.43	6,434.67	6,718.04
Horsepower	2 x 1 HP	2 x 1 HP	2 x 2 HP	2 x 2 HP
Volts	208-230	208-230	208-230	208-230
Amps (each motor)	7.5 each motor	7.5 each motor	15 each motor	15 each motor
Phase	Single	Single	Single	Single
RPM	3450	3450	3450	3450
Ambient Temperature	32°C/104°F	32°C/104°F	32°C/104°F	32°C/104°F
Cycle	60 Hz	60 Hz	60 Hz	60 Hz
Width	24"	24"	24"	24"
Depth	17"	17"	17"	17"
Height	24"	24"	24"	24"
Shipping Weight	175 lbs.	175 lbs.	215 lbs.	215 lbs.
Max. sealed vacuum	Approx. 20-25 inches Hg Adjustable			
Typical application Typical appl. (2 pumps)	1 Dr. & Staff 3 Dr. & Staff	1 Dr. & Staff 3 Dr. & Staff	2 Dr. & Staff 5 Dr. & Staff	2 Dr. & Staff 5 Dr. & Staff

	CV-101FS	CV-101FSW	CV-102FS	CV-102FSW
Part Number	64586121	64586121W	64586122	64586122W
Retail Price	$2,558.52	2,954.42	3,203.01	3,508.89
Horsepower	1 x 1 HP	1 x 1 HP	1 x 2 HP	1 x 2 HP
Volts	115 / 208-230	115 / 208-230	208-230	208-230
Amps (each motor)	13.2 / 7.2-6.6	13.2 / 7.2-6.6	11.9-10.7	11.9-10.7
Phase	Single	Single	Single	Single
RPM	3450	3450	3450	3450
Ambient Temperature	32°C/104°F	32°C/104°F	32°C/104°F	32°C/104°F
Cycle	60 Hz	60 Hz	60 Hz	60 Hz
Width	12"	12"	14"	14"
Depth	9"	9"	11"	11"
Height	16"	16"	20"	20"
Shipping Weight	61 lbs.	61 lbs.	78 lbs.	78 lbs.
Max. sealed vacuum	Approx. 20-25 inches Hg Adjustable			
Typical application Typical appl. (2 pumps)	1 Dr. & Staff	1 Dr. & Staff	2 Dr. & Staff	2 Dr. & Staff

ACCESSORIES

WR-100

AM-200

Ordering Information

		Retail
64592011	WR-100 - Water Recirculator for CV-101	$606.00
64592012	WR-100 - Water Recirculator for CV-102	606.00
64568202	Top shelf with a 300 lb. capacity for stacking compressors	156.00
64568039	WS-100 - Water sentinel kit (may be factory installed if ordered w/pump) (Two required for dual pumps)	163.00
64592005	WR-100 - Water Recirculator for MC-201 & MC-202 pumps	736.00
64568129	Cleaner for Water Recirculator (Case of 48)	118.00
64656200	AM-200 - Air/Water or Nitrous Oxide separator	489.00

WC-210

Master Water Control Valves now come standard with 24V Solenoid valve and transformer for easy installation to both CustomAir and RAMVAC master control panels. 115V versions are available; please call 1-866-DTE-INFO for ordering information and availability.

MASTER WATER CONTROL VALVES		Retail
64622123	WC-110- Valve, master water control, 1/2" with filter, 24V solenoid	$1,156.00
64622124	WC-210- Valve, master water control, 3/4" with filter, 24V solenoid	1,231.00
64622125	WC-230- Valve, master water control, 3/4" with filter and regulator, 24V solenoid	1,610.00
64622134	WC-300- Valve, master water control, 1" with filter, 24V solenoid	1,772.00
64545021	Filter, water 3/4"	257.00

REPLACEMENT CARTRIDGES		
64520006	Replacement cartridge for master valve with water filter, 2/box	$71.00
64553019	Gasket for filter	19.00

BUCK / BOOST TRANSFORMERS		
64637006	Transformer, direct wire (4.8 KVA) for use with CV-101, CV-102, MC-201, MC-202 (one motor at a time), or single head compressor	$461.00
64637013	Transformer, direct wire (14.4 KVA) for use with 2 or more compressor heads	721.00

REPLACEMENT PUMP CARTRIDGES		
64586811R	MC-201FS 1 HP	$2,164.00
64586812R	MC-202FS 2 HP	2,516.00
64586813R	MC-201FS w/ water recirculator	2,179.00
64586814R	MC-202FS w/ water recirculator	2,531.00
64586100R	MC-201 Old style-208/230 Volt (no relay box)	1,977.00
64586200R	MC-202 Old style-208/230 Volt (no relay box)	2,140.00

Please contact DentalEZ Customer Service for in-warranty vacuum systems at 1-866-DTE-INFO.

SHIPPING INFORMATION

811R: 52 lbs., 100R: 46 lbs., 812R: 68 lbs., 200R: 60 lbs. Width 17" x Depth 18" x Height 21"